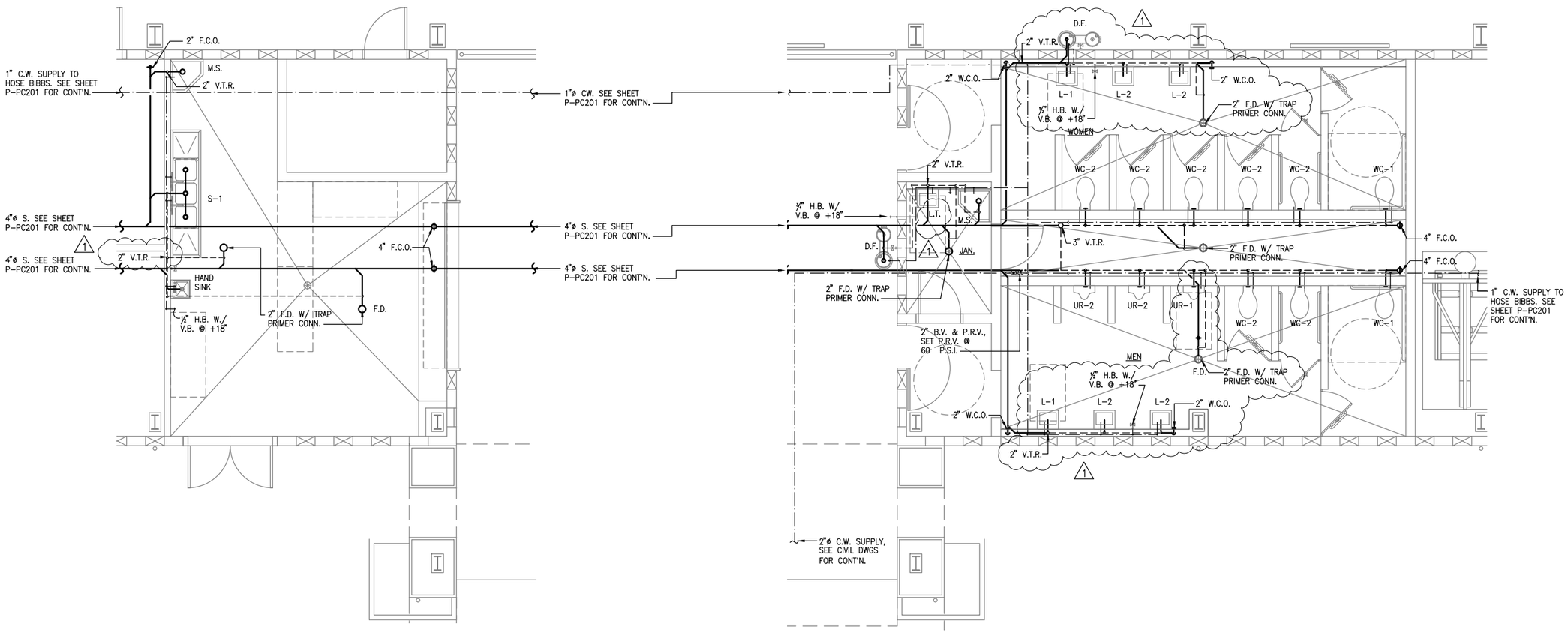

A PARTIAL PLUMBING PLAN - PLAY COURT
SCALE: 3/32" = 1'-0"

B PARTIAL PLUMBING PLAN - PLAY COURT
SCALE: 3/32" = 1'-0"

Engineering Partners, Inc.
Progressive Solutions
455 ELANIKAULA STREET
HILO, HAWAII, 96720
www.epintegrated.com

NIMR Y. TAMIMI
LICENSED PROFESSIONAL ENGINEER
Exp. 04/30/14
No. 7936-M
HAWAII, U.S.A.

THIS WORK WAS PREPARED BY ME OR UNDER MY SUPERVISION, CONSTRUCTION OF THIS PROJECT WILL BE UNDER MY OBSERVATION.
SIGNATURE

MARK	DATE	DESCRIPTION
3	2014-04-10	ADDENDUM NO. 3

REVIEWED:
DEPARTMENT OF PARKS AND RECREATION
DATE

COUNTY OF HAWAII
DEPARTMENT OF PARKS & RECREATION
101 PAUAHI STREET; SUITE 6 / HILO, HAWAII 96720 / PHONE: 808.961.8311 / FAX: 808.961.8411

PAHOA PARK MASTER PLAN
PHASE I - BID SUBMITTAL 2014-02-10

JOB NO.: PR-4234
PAHOA, PUNA, HAWAII
TMK: (3) 1-5-002:020

PLAN SHEET DESCRIPTION: PARTIAL PLUMBING PLAN- PLAY COURT

DESIGNED BY: MS
DRAWN BY: MS
CHECKED BY: NYT
SHEET NO. P-PC202
OF SHEETS
DATE: 2014-02-10

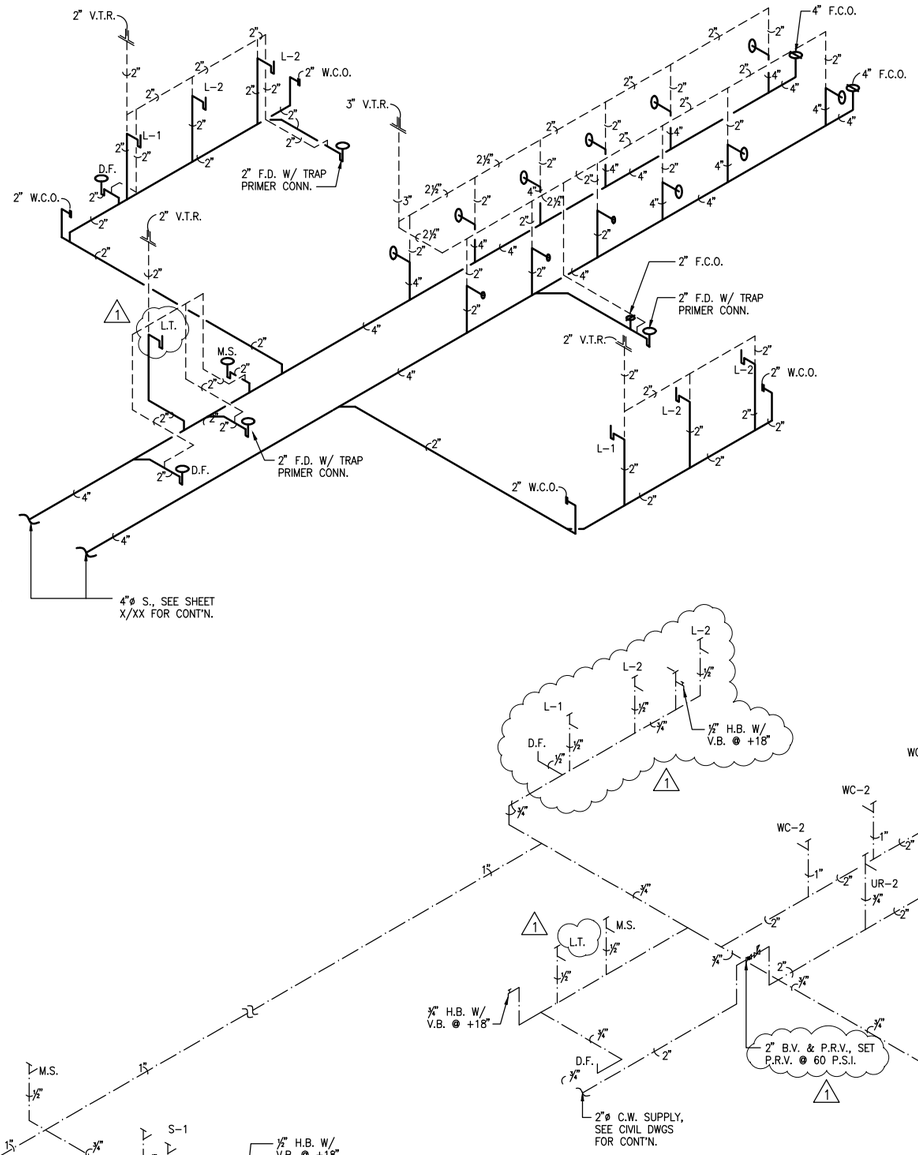

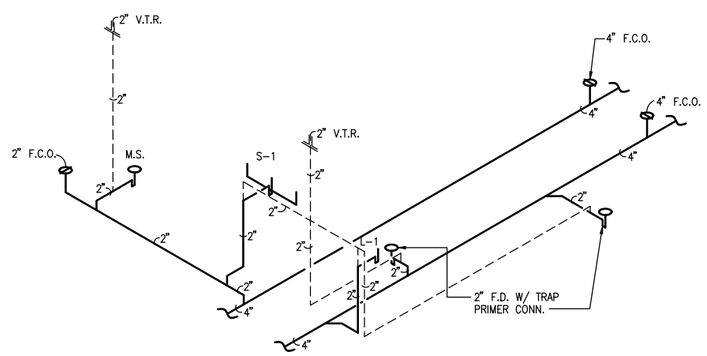

A SANITARY PIPING DIAGRAM - PLAY COURT

NOT TO SCALE

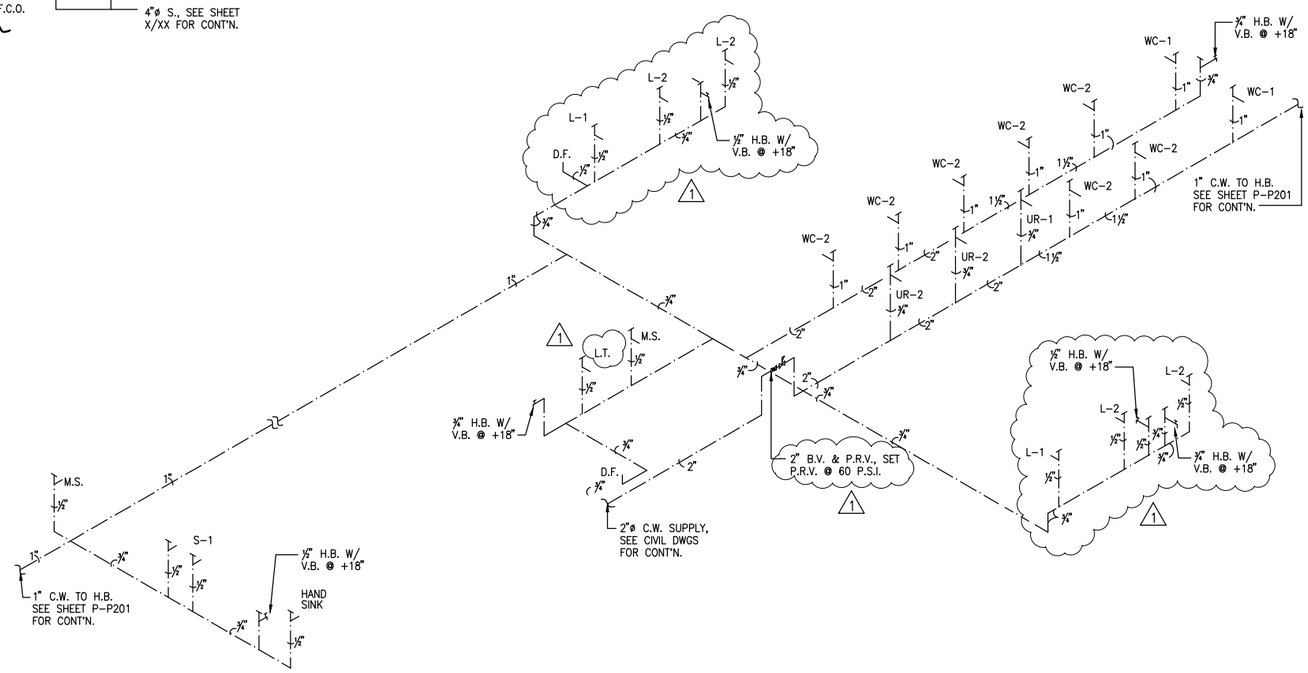

B WATER PIPING DIAGRAM- PLAY COURT

NOT TO SCALE

Engineering Partners, Inc.
Progressive Solutions
455 ELANIKAULA STREET
HILO, HAWAII, 96720
www.epintegrated.com

NAIR Y. TAMAMI
LICENSED PROFESSIONAL ENGINEER
Exp. 04/30/14
No. 7936-U
HAWAII, U.S.A.

THIS WORK WAS PREPARED BY ME OR UNDER MY SUPERVISION, CONSTRUCTION OF THIS PROJECT WILL BE UNDER MY OBSERVATION.

SIGNATURE

MARK	DATE	DESCRIPTION
1	2014-04-10	ADDENDUM NO. 3

REVIEWED:

DEPARTMENT OF PARKS AND RECREATION DATE

COUNTY OF HAWAI'I
DEPARTMENT OF PARKS & RECREATION
101 PAUAHI STREET, SUITE 6 / HILO, HAWAII 96720 / PHONE: 808.961.8311 / FAX: 808.961.8411

PAHOA PARK MASTER PLAN
PHASE I - BID SUBMITTAL 2014-02-10

JOB NO.: PR-4234

PAHOA, PUNA, HAWAII

TMK: (3) 1-5-002:020

PLAN, SHEET DESCRIPTION: PIPING DIAGRAMS - PLAY COURT

DESIGNED BY: MS
DRAWN BY: MS
CHECKED BY: NYT

SHEET NO. P-PC203

OF SHEETS

DATE: 2014-02-10