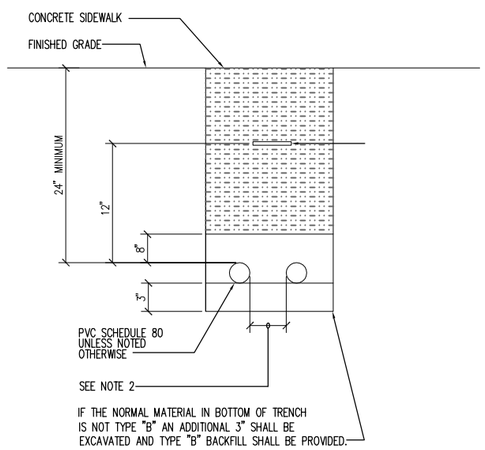

BACKFILL:

TYPE "A" : NON-CONTAMINATED NATIVE SOIL MATERIAL WHICH DOES NOT CONTAIN MORE THAN 50% GRAVEL, AND ALSO, DOES NOT CONTAIN HARD LUMPS OF EARTH 3 INCHES IN GREATEST DIMENSION, ROCKS LARGER THAN 3 INCHES IN LARGEST DIMENSION, HIGHLY PLASTIC CLAY, POORLY-GRADED SAND AND GRAVEL (CLASSIFIED AS SP AND GP USING THE UNITED SOIL CLASSIFICATION SYSTEM), ORGANICS, DEBRIS, OR OTHER UNSUITABLE OR DELETERIOUS MATERIALS.

TYPE "B" : SELECT GRANULAR MATERIAL PASSING A ONE (1) INCH SIEVE SUCH AS THREE-QUARTERS (3/4) INCH AGGREGATE BASE COURSE GRAVEL, S4C OR MATERIAL THAT IS FREE OF ORGANICS DEBRIS OR HIGHLY-PLASTIC CLAY AND MEETS THE FOLLOWING GRADATION:

SIEVE SIZE	PERCENT PASSING BY WEIGHT
1"	100
3/4"	90-100
NO. 4	35-100
NO. 40	10-30
NO. 200	3-15

NOTES:

1. WHERE TRENCH ENCOUNTERS EXISITING CONCRETE OR ASPHALT CONCRETE, SURFACE SHALL BE SAWCUT. BACKFILL, COMPACT AND PATCH SURFACE TO MATCH ADJACENT AREA.
2. PROVIDE 3" SEPARATION BETWEEN DUCTS OF SAME SYSTEM AND 12" SEPARATION BETWEEN ELECTRICAL DUCTS AND DUCTS OF DIFFERENT SYSTEMS.

3 TYP. DUCT SECTION - DIRECT BURIED

NOT TO SCALE

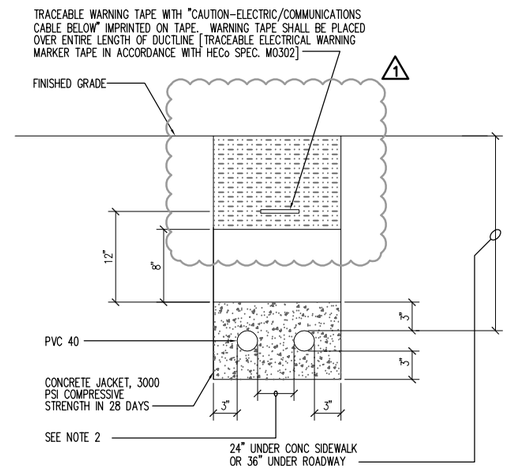

BACKFILL:

TYPE "A" : NON-CONTAMINATED NATIVE SOIL MATERIAL WHICH DOES NOT CONTAIN MORE THAN 50% GRAVEL, AND ALSO, DOES NOT CONTAIN HARD LUMPS OF EARTH 3 INCHES IN GREATEST DIMENSION, ROCKS LARGER THAN 3 INCHES IN LARGEST DIMENSION, HIGHLY PLASTIC CLAY, POORLY-GRADED SAND AND GRAVEL (CLASSIFIED AS SP AND GP USING THE UNITED SOIL CLASSIFICATION SYSTEM), ORGANICS, DEBRIS, OR OTHER UNSUITABLE OR DELETERIOUS MATERIALS.

TYPE "B" : SELECT GRANULAR MATERIAL PASSING A ONE (1) INCH SIEVE SUCH AS THREE-QUARTERS (3/4) INCH AGGREGATE BASE COURSE GRAVEL, S4C OR MATERIAL THAT IS FREE OF ORGANICS DEBRIS OR HIGHLY-PLASTIC CLAY AND MEETS THE FOLLOWING GRADATION:

SIEVE SIZE	PERCENT PASSING BY WEIGHT
1"	100
3/4"	90-100
NO. 4	35-100
NO. 40	10-30
NO. 200	3-15

NOTES:

1. ELECTRICAL AND TELEPHONE DUCTS SIMILAR.
2. PROVIDE 1-1/2" SEPARATION BETWEEN DUCTS OF SAME SYSTEM AND 3" BETWEEN DUCTS OF DIFFERENT SYSTEMS
3. WHERE TRENCH ENCOUNTERS EXISITING CONCRETE OR ASPHALT CONCRETE, SURFACE SHALL BE SAWCUT. BACKFILL, COMPACT AND PATCH SURFACE TO MATCH ADJACENT AREA. SEE TRENCH RESTORATION DETAIL
4. SEE DUCT SECTION DETAILS FOR CONDUIT ARRANGEMENT

2 TYP. DUCT SECTION - CONC. ENCASED

NOT TO SCALE

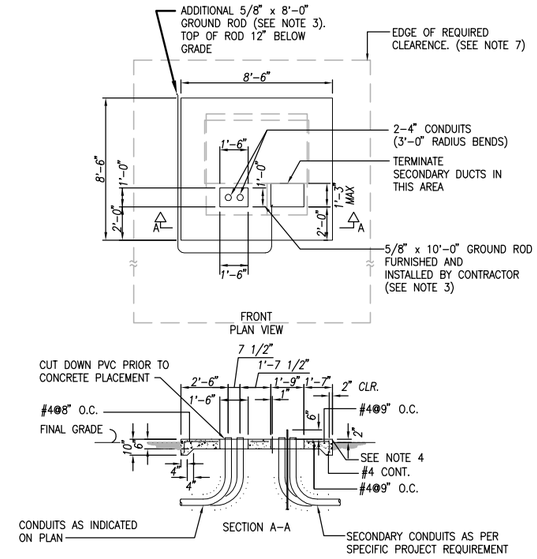

NOTES:

1. VERIFY ALL REQUIREMENTS WITH FIGURE 3-12A, HELCO ELECTRIC SERVICE INSTALLATION MANUAL.
2. REFER TO STD. 30-5000 FOR LOCATION AND CLEARANCES.
3. REFER TO STD. 22-2005 FOR 3 PHASE PADMOUNTED TRANSFORMER REQUIREMENTS.
4. ⅝" DIAMETER x 10'-0" GROUND ROD (STOCK CODE 19347) FURNISHED BY UTILITY AND INSTALLED BY CUSTOMER. IF GROUND RESISTANCE IS MORE THAN 25 OHMS, INSTALL ADDITIONAL ⅝" DIAMETER x 8'-0" GROUND ROD (STOCK CODE 101527) AND CONNECT 4/0 BARE COPPER GROUND WIRE BETWEEN GROUND RODS. A MINIMUM OF 6'-0" SHALL BE MAINTAINED BETWEEN THE DRIVEN GROUND RODS. A SECOND GROUND ROD WILL PROBABLY BE REQUIRED WHEN SOIL RESISTIVITY IS GREATER THAN 67 OHM-METERS.
5. CONCRETE: 3000 PSI COMPRESSIVE STRENGTH IN 28 DAYS. MOISTURE CUE CONCRETE PAD A MINIMUM OF 7 DAYS. DO NOT INSTALL TRANSFORMER UNTIL CONCRETE COMPRESSIVE STRENGTH REACHES 1,500 PSI MINIMUM OR AFTER 14 DAYS.
6. REINFORCING: ASTM A615, GRADE 40 MINIMUM.
7. LOCATE, SECURE, AND CAP ALL CONDUITS BEFORE POURING PAD. TOP OF CONCRETE TO BE SMOOTH AND TRUE, WOOD-FLOAT FINISH, FREE OF DEFECTS, AS PER CITY AND COUNTY SPECIFICATIONS. ROUND ALL EXPOSED EDGES TO ¾" CHAMFER.
8. MANINTAIN A RELATIVELY LEVEL, MINIMUM CLEARENCE OF 2'-6" FROM SIDES OF THE PAD, 2'-0" FROM THE BACK OF THE PAD, AND 8'-0" IN FRONT OF THE PAD. EXTEND CONCRETE PAD AN ADDITIONAL 8'-0" IN FRONT IF LOCATED IN PLANTING AREA.

1 500 KVA COMMERCIAL UTILITY PAD MOUNT XFMR DETAIL

NOT TO SCALE

Engineering Partners, Inc.
Progressive Solutions
455 ELANIKAULA STREET
HILO, HAWAII, 96720
www.epintegrated.com

CHRISTOPHER J. LOVETT — LICENSED PROFESSIONAL ENGINEER — Exp. 04/30/14 — No. 14689-C — HAWAII, U.S.A.

THIS WORK WAS PREPARED BY ME OR UNDER MY SUPERVISION. CONSTRUCTION OF THIS PROJECT WILL BE UNDER MY OBSERVATION.

SIGNATURE

MARK	DATE	DESCRIPTION
1	2014-04-10	CHANGED HATCHING ON DETAIL TO MATCH

REVIEWED: DEPARTMENT OF PARKS AND RECREATION — DATE

COUNTY OF HAWAI'I
DEPARTMENT OF PARKS & RECREATION
101 PAUAHI STREET, SUITE 6 / HILO, HAWAII 96720 / PHONE: 808.961.8311 / FAX: 808.961.8411

PAHOA PARK MASTER PLAN
PHASE I - BID SUBMITTAL 2014-02-10

JOB NO.: PR-4234 — PAHOA, PUNA, HAWAII — TMK: (3) 1-5-002:020

PLAN SHEET DESCRIPTION: ELECTRICAL DETAILS

DESIGNED BY:
DRAWN BY:
CHECKED BY:

SHEET NO. EGI002 — 1 OF SHEETS

DATE: 2014-02-10

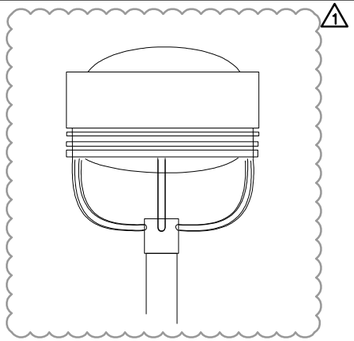

FEATURES

LAMP TYPE: LED
WATTAGE: 72W

OPTIONS

MOUNTING: 12' POLE W/ SINGLE ARM (REFER TO DETAIL 6/EGI003)
OPTIC DISTRIBUTION: TYPE III
PHOTOCELL MOUNTED ON UNIT

SPECIFICATIONS

MANUFACTURER: C&W SOLUTIONS OR APPROVED EQUIVALENT
PART NO. (BASIS OF DESIGN): CWES-HSM-74-2-4-U-B-50-SF7
HOUSING: EXTRUDED ALUMINUM

EFFICACY (LUMEN/W): >82 @ 5000K

REFLECTOR: TYPE III DISTRIBUTION

ELECTRICAL: 120 OR 277 VOLT DRIVER

FINISH: ANNODIZED BRONZE

OTHER: UL LISTED FOR WET LOCATION, 5000K WITH BLUE LIGHT FILTER

3 TYPE 'B' FIXTURE

SCALE: N.T.S.

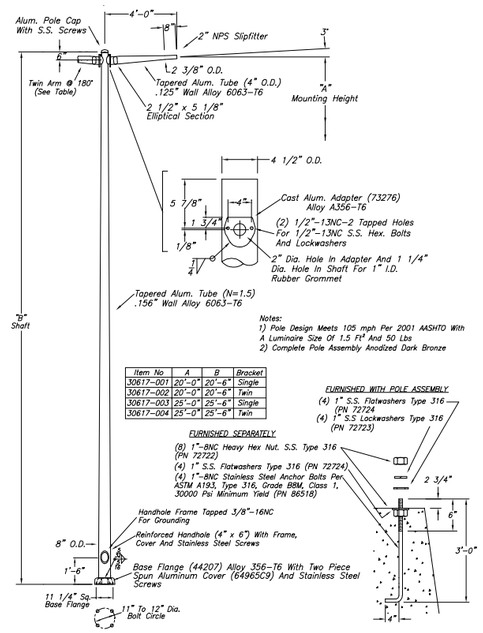

Item No	A	B	Bracket
30617-001	20'-0"	20'-6"	Single
30617-002	20'-0"	20'-6"	Twin
30617-003	25'-0"	25'-6"	Single
30617-004	25'-0"	25'-6"	Twin

2 ROADWAY/PARKING POLE DETAIL

SCALE: N.T.S.

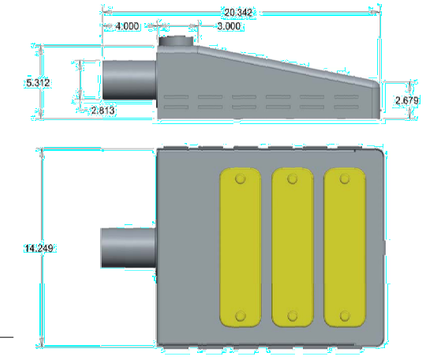

FEATURES

LAMP TYPE: LED
WATTAGE: SINGLE ARM: 90W, DUAL ARM: 180W

OPTIONS

MOUNTING: 20' POLE W/ ARM NUMBER PER PLANS (REFER TO DETAIL 2/EGI003) FOR ROADWAY AND 4/EGI007 FOR PARKING)
OPTIC DISTRIBUTION: TYPE III
PHOTOCELL MOUNTED ON UNIT

SPECIFICATIONS

MANUFACTURER: C&W SOLUTIONS OR APPROVED EQUIVALENT
PART NO. (BASIS OF DESIGN): CWES-F4-120-M1A-U-P-A-50-PC
HOUSING: EXTRUDED ALUMINUM

EFFICACY (LUMEN/W): >90 @ 5000K

REFLECTOR: TYPE III DISTRIBUTION

ELECTRICAL: 120 OR 277 VOLT DRIVER

FINISH: ANNODIZED BRONZE

OTHER: UL LISTED FOR WET LOCATION, 5000K WITH BLUE LIGHT FILTER

1 TYPE 'A' FIXTURE

SCALE: N.T.S.

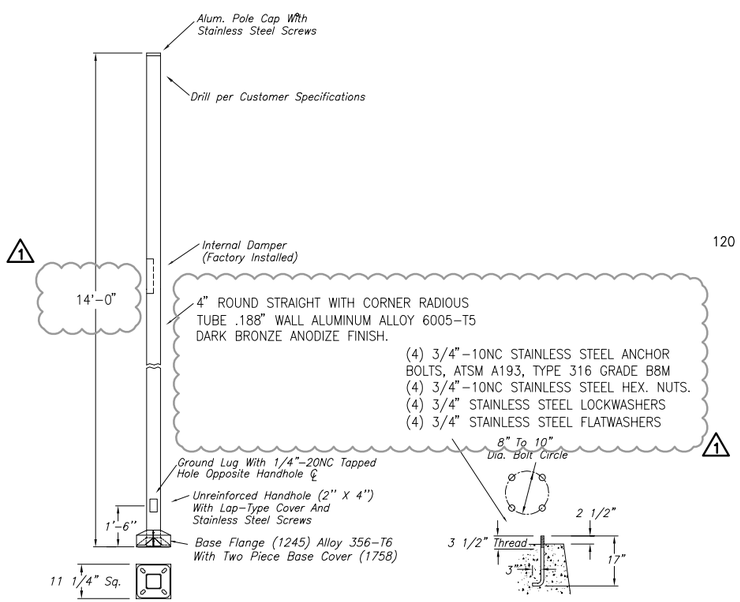

6 WALKWAY POLE DETAIL

SCALE: N.T.S.

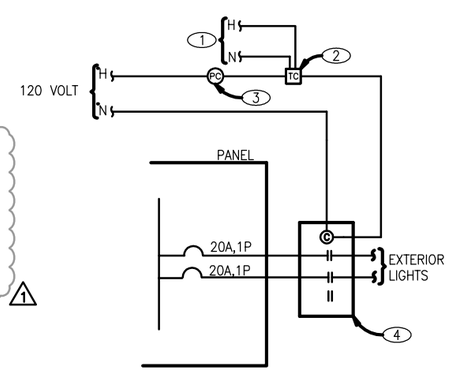

5 WALKWAY LIGHTING CONTACTOR DETAIL

SCALE: N.T.S.

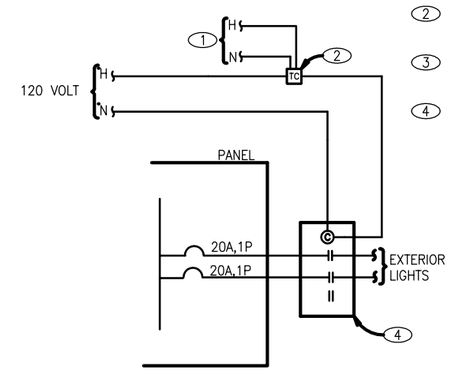

4 PARKING/ROADWAY LIGHTING CONTACTOR DETAIL

SCALE: N.T.S.

NOTES

1. 120 VOLT POWER TO TIMECLOCK
2. TIMECLOCK TORK 7100 SPST 120V MOUNT ABOVE PANEL.
3. PHOTOCELL TORK 2100 SERIES SPST 120 VOLT MOUNT ON ROOF FACING NORTH.
4. ELECTRICALLY HELD SQUARE D CLASS LIGHTING CONTACTOR 8903 LG SERIES 30AMP RATED WITH 120 VOLT OR 277 VOLT PULL IN COIL AS REQUIRED. PROVIDE QUANTITY OF CONTACTS AS REQUIRED PER DRAWINGS AND/OR SCHEDULE. IF MORE THEN 12 CONTACTS ARE REQUIRED, PROVIDE ADDITIONAL CONTACTOR(S) WITH COILS WIRE IN PARALLEL.

Engineering Partners, Inc.
Progressive Solutions
455 ELANIKAULA STREET
HILO, HAWAII, 96720
www.epintegrated.com

CHRISTOPHER J. LOVETT
LICENSED PROFESSIONAL ENGINEER
Exp. 04/30/14
No. 14689-C
HAWAII, U.S.A.

THIS WORK WAS PREPARED BY ME OR UNDER MY SUPERVISION. CONSTRUCTION OF THIS PROJECT WILL BE UNDER MY OBSERVATION.
SIGNATURE

MARK	DATE	DESCRIPTION
1	2014-04-10	UPDATED REFERENCE DETAIL LOCATION, DETAIL CHANGES

REVIEWED:
DEPARTMENT OF PARKS AND RECREATION — DATE

COUNTY OF HAWAI'I
DEPARTMENT OF PARKS & RECREATION
101 PAUAHI STREET, SUITE 6 | HILO, HAWAII 96720 | PHONE: 808.961.8311 | FAX: 808.961.8411

PAHOA PARK MASTER PLAN
PHASE I - BID SUBMITTAL 2014-02-10

JOB NO.: PR-4234 — PAHOA, PUNA, HAWAII — TMK: (3) 1-5-002:020

PLAN SHEET DESCRIPTION: ELECTRICAL LIGHTING FIXTURE DETAILS

DESIGNED BY:
DRAWN BY:
CHECKED BY:

SHEET NO. EGI003
1 OF SHEETS

DATE: 2014-02-10

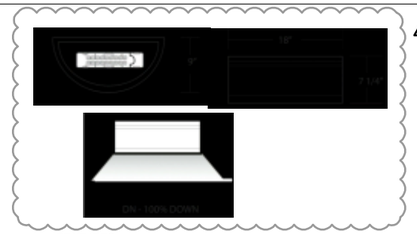

FEATURES

LAMP TYPE: LED
SHIELDING: SHATTER RESISTANT
WATTAGE: 32W

OPTIONS

MOUNTING: SURFACE
NOM. DIMENSIONS: 6.5" H X 17.5" W X 8.5" L

SPECIFICATIONS

MANUFACTURER: C&W SOLUTIONS OR APPROVED EQUIVALENT
PART NO. (BASIS OF DESIGN): CWES-WO-74-9-U-G-50-SF7
HOUSING: ALUMINUM CAST, BRONZE

EFFICACY (LUMENS/W): >102 @ 5000K

REFLECTORS: FULL CUT OFF

ELECTRICAL: 120 OR 277 VOLT DRIVER

FINISH: BRONZE

OTHER: UL LISTED FOR WET LOCATION, 5000K WITH BLUE LIGHT FILTER

3 TYPE 'F' FIXTURE

SCALE: N.T.S.

FEATURES
WATTAGE: 30W

LAMP TYPE: LED
COLOR TEMP: 3500K
HOUSING: IC RATED

OPTIONS

OTHER: LOW IRIDESCENT CLEAR REFLECTOR, WHITE TRIM, WET LOCATION LISTED

NOM. DIMENSIONS: 8" DIA. X MAX. 8" D

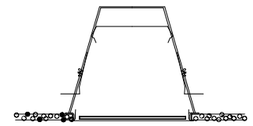

SPECIFICATIONS

MANUFACTURER: LITHONIA OR APPROVED EQUIVALENT
PART NO. (BASIS OF DESIGN): DOM8LED-1500L-3500K-DO8AZ-TRW
REFLECTORS: CLEAR SEMI-SPECULAR ALZAK ALUMINUM, LOW IRIDESCENT WITH SELF FLANGE

ELECTRICAL: UNIVERSAL VOLTAGE

OTHER: UL LISTED FOR DAMN LOCATION

2 TYPE 'E' FIXTURE

SCALE: N.T.S.

FEATURES

LAMP TYPE: LED
SHIELDING: ACRYLIC
WATTAGE: 50W

OPTIONS

MOUNTING: SURFACE W/ BEAM CLAMP (DO NOT PENETRATE BOTTOM FLANGE OF RAFTER)
NOM. DIMENSIONS: 4" H X 6" W X 50" L

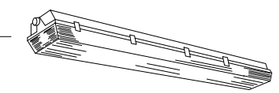

SPECIFICATIONS

MANUFACTURER: LITHONIA, PHILLIPS, COLUMBIA OR APPROVED EQUIVALENT
PART NO. (BASIS OF DESIGN): BEGHELL: ILLUMINIA BS100LED-4-HT-50W-WT35-120/277V-JM
HOUSING: MOLDED HIGH-IMPACT POLYESTER OR FIBERGLASS REINFORCED PLASTIC WITH COLD ROLLED STEEL INTERIOR COMPONENTS

REFLECTORS: INTERNAL WHITE REFLECTOR

ELECTRICAL: 120 OR 277 VOLT DRIVER

FINISH: WHITE PAINTED

OTHER: UL LISTED FOR WET LOCATION. PROVIDE EMERGENCY BALLAST WHERE NOTED ON PLANS

1 TYPE 'D' FIXTURE

SCALE: N.T.S.

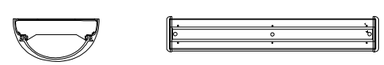

FEATURES

LAMP TYPE: LED
SHIELDING: PEARLESCENT POLYCARBONATE
WATTAGE: 20W

OPTIONS

MOUNTING: PENDANT
NOM. DIMENSIONS: 4" H X 8" W X 50.5" L

SPECIFICATIONS

MANUFACTURER: KENALL, LITHONIA, COLUMBIA OR APPROVED EQUIVALENT
PART NO. (BASIS OF DESIGN): KENALL MLHA8-48-R-MW-PP-50L50K-DV-DL-PM
HOUSING: MARINE GRADE ALUMINUM, EXTRUDED BODY WITH DIE-CAST END CAPS

EMERGENCY OPTION: LEL OPTION FOR FIXTURES INDICATED AS EMERGENCY

REFLECTORS: FULL CUT OFF

CONTRACTOR TO PROVIDE PENDANT ROD FOR FIXTURE MOUNTING

FINISH: MATTE WHITE

OTHER: UL LISTED FOR DAMP LOCATION

5 TYPE 'H' FIXTURE

SCALE: N.T.S.

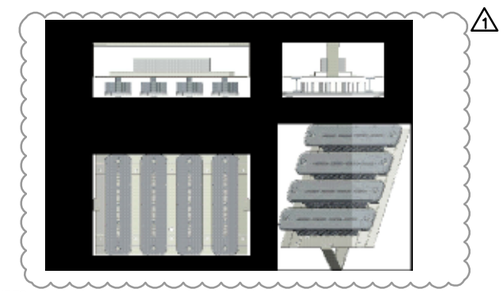

FEATURES

LAMP TYPE: LED
WATTAGE: 144W

OPTIONS

MOUNTING: 1/2" PENDANT MOUNT
OPTIC DISTRIBUTION: TYPE V SHORT

SPECIFICATIONS

MANUFACTURER: C&W SOLUTIONS OR APPROVED EQUIVALENT
PART NO. (BASIS OF DESIGN): CWES-OFBL-74-4-4-U-W-50
HOUSING: WHITE POWDER COATING EXTRUDED STEEL

MAINTAINED OUTPUT: 12,000 LUMENS

REFLECTOR: TYPE V DISTRIBUTION (SHORT)

ELECTRICAL: 120 OR 277 VOLT DRIVER

FINISH: BLACK POWDER COAT

OTHER: UL LISTED FOR WET LOCATION, 5000K

4 TYPE 'G' FIXTURE

SCALE: N.T.S.

Engineering Partners, Inc.
Progressive Solutions
455 ELANIKAULA STREET
HILO, HAWAII, 96720
www.epintegrated.com

CHRISTOPHER J. LOVETT
LICENSED PROFESSIONAL ENGINEER
Exp. 04/30/14
No. 14689-C
HAWAII, U.S.A.

THIS WORK WAS PREPARED BY ME OR UNDER MY SUPERVISION. CONSTRUCTION OF THIS PROJECT WILL BE UNDER MY OBSERVATION.

SIGNATURE

MARK	DATE	DESCRIPTION
1	2014-04-10	UPDATED WATTAGES AND DETAIL INFORMATION

REVIEWED:

DEPARTMENT OF PARKS AND RECREATION — DATE

COUNTY OF HAWAII
DEPARTMENT OF PARKS & RECREATION
101 PAUAHI STREET, SUITE 6 / HILO, HAWAII 96720 / PHONE: 808.961.8311 / FAX: 808.961.8411

PAHOA PARK MASTER PLAN
PHASE I - BID SUBMITTAL 2014-02-10

JOB NO.: PR-4234 — PAHOA, PUNA, HAWAII — TMK: (3) 1-5-002:020

PLAN SHEET DESCRIPTION: ELECTRICAL LIGHTING FIXTURE DETAILS

DESIGNED BY:
DRAWN BY:
CHECKED BY:

SHEET NO. EGI006

1 OF SHEETS

DATE: 2014-02-10

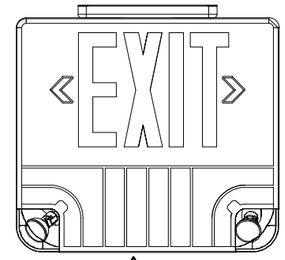

FEATURES
WATTAGE: 25W

MANUFACTURER: PHILLIPS, COLUMBIA, LITHONIA, OR APPROVED EQUIVALENT
PART NO. (BASIS OF DESIGN): BEGHELLI FTZ-C-12V-42W-LG-1-U
LAMP TYPE: LED
MOUNTING: UNIVERSAL
LETTERS: GREEN
NOM. DIMENSIONS: 13-3/4" W X 12" H X 2" D

GENERAL DESCRIPTION
HOUSING: FLAME RATED, UV STABLE ABS DIECAST ALUMINUM
6" H LETTERS WITH 3/4" STROKE.
PROVIDE POLYCARBONATE VANDAL SHEILD.
ELECTRICAL: 120 OR 277 VOLT

FINISH: WHITE

OTHER: MINIMUM BRIGHTNESS 20 CD/SQ METER ON FACE OF SIGN.

2 TYPE 'XB' FIXTURE - PLAY COURT
SCALE: N.T.S.

FEATURES
WATTAGE: 5W

MANUFACTURER: PHILLIPS, COLUMBIA, LITHONIA, OR APPROVED EQUIVALENT
PART NO. (BASIS OF DESIGN): BEGHELLI FTZ-SA-LG-1-U
LAMP TYPE: LED
MOUNTING: UNIVERSAL
LETTERS: GREEN
NOM. DIMENSIONS: 12" W X 8 3/4" H X 1 5/8" D

GENERAL DESCRIPTION
HOUSING: FLAME RATED, UV STABLE ABS DIECAST ALUMINUM
6" H LETTERS WITH 3/4" STROKE.
PROVIDE POLYCARBONATE VANDAL SHEILD.
ELECTRICAL: 120 OR 277 VOLT

FINISH: WHITE

OTHER: MINIMUM BRIGHTNESS 20 CD/SQ METER ON FACE OF SIGN.

1 TYPE 'XA' FIXTURE - PLAY COURT
SCALE: N.T.S.

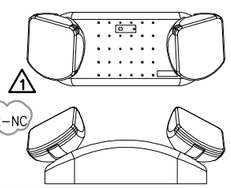

FEATURES

MANUFACTURER: PHILLIPS, COLUMBIA, LITHONIA, OR APPROVED EQUIVALENT
PART NO. (BASIS OF DESIGN): BEGHELLI BRV-12-42-NC
LAMP TYPE: 6W HALOGEN
MOUNTING: UNIVERSAL
NOM. DIMENSIONS: 12" W X 8 3/4" H X 1 5/8" D

GENERAL DESCRIPTION
HOUSING: FLAME RATED, UV STABLE ABS DIECAST ALUMINUM
PROVIDE POLYCARBONATE VANDAL SHEILD.

ELECTRICAL: 120 OR 277 VOLT

FINISH: WHITE

OTHER: 6W HALOGEN LAMP INCLUDED WITH FIXTURE

3 TYPE 'XC' FIXTURE - PLAY COURT
SCALE: N.T.S.

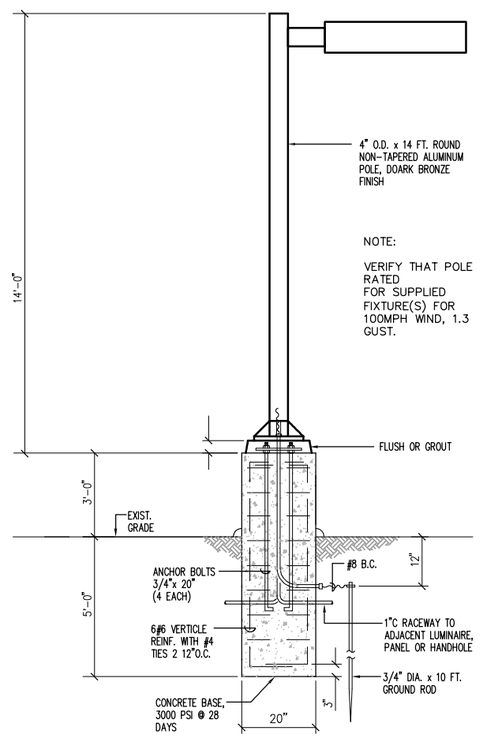

4 NEW POLE MOUNTED LUMINAIRE AND CONCRETE BASE DETAIL
SCALE: NTS

Engineering Partners, Inc.
Progressive Solutions
455 ELANIKAULA STREET
HILO, HAWAII, 96720
www.epintegrated.com

CHRISTOPHER J. LOVETT
LICENSED PROFESSIONAL ENGINEER
Exp. 04/30/14
No. 14689-C
HAWAII, U.S.A.

THIS WORK WAS PREPARED BY ME OR UNDER MY SUPERVISION. CONSTRUCTION OF THIS PROJECT WILL BE UNDER MY OBSERVATION.
SIGNATURE

MARK	DATE	DESCRIPTION
1	2014-04-10	DETAILS INFORMATION, ADDED DETAIL 4

REVIEWED:
DEPARTMENT OF PARKS AND RECREATION — DATE

COUNTY OF HAWAI'I
DEPARTMENT OF PARKS & RECREATION
101 PAUAHI STREET, SUITE 6 / HILO, HAWAII 96720 / PHONE: 808.961.8311 / FAX: 808.961.8411

PAHOA PARK MASTER PLAN
PHASE I - BID SUBMITTAL 2014-02-10

JOB NO.: PR-4234 — PAHOA, PUNA, HAWAII — TMK: (3) 1-5-002:020

PLAN SHEET DESCRIPTION: ELECTRICAL LIGHTING FIXTURE DETAILS

DESIGNED BY:
DRAWN BY:
CHECKED BY:

SHEET NO. EGI007
1 OF SHEETS
DATE: 2014-02-10

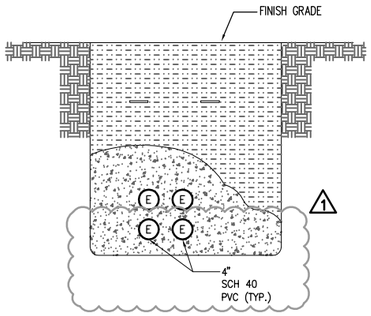

3 DUCT SECTION
SCALE: N.T.S.

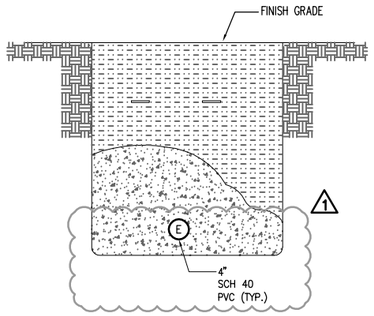

2 DUCT SECTION
SCALE: N.T.S.

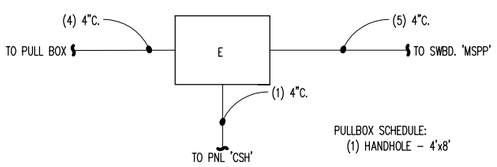

5 PULLBOX GROUP 'A'
SCALE: N.T.S.

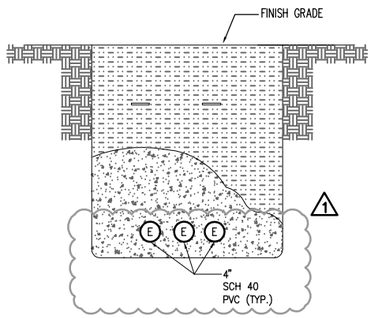

4 DUCT SECTION
SCALE: N.T.S.

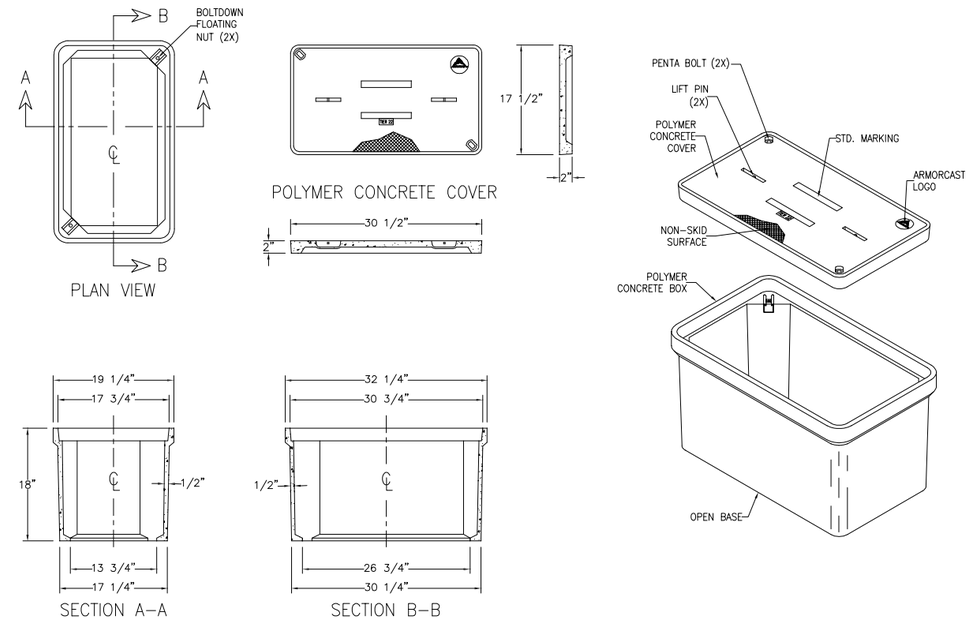

NOTE: ALL ATTACHMENTS OF COVER ASSEMBLY TO CONCRETE BOX SHALL BE MADE USING PENTA BOLTS.

1 CONCRETE POLYMER PULLBOX DETAIL
SCALE: N.T.S.

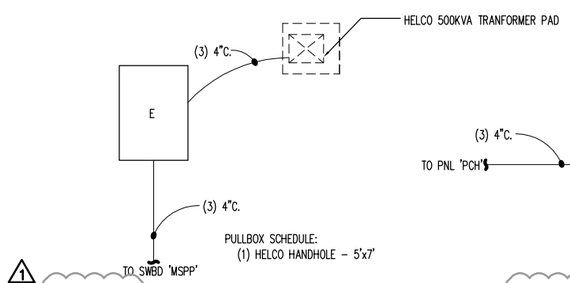

9 PULLBOX GROUP 'E'
SCALE: N.T.S.

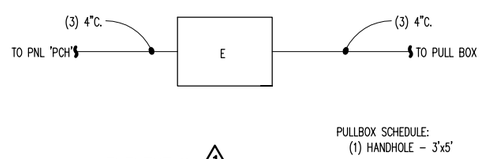

8 PULLBOX GROUP 'D'
SCALE: N.T.S.

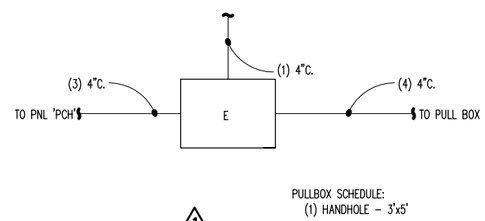

7 PULLBOX GROUP 'C'
SCALE: N.T.S.

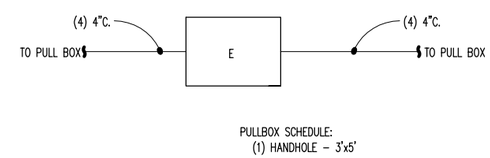

6 PULLBOX GROUP 'B'
SCALE: N.T.S.

Engineering Partners, Inc.
Progressive Solutions
455 ELANIKAULA STREET
HILO, HAWAII, 96720
www.epintegrated.com

CHRISTOPHER J. LOVETT
LICENSED PROFESSIONAL ENGINEER
Exp. 04/30/14
No. 14689-C
HAWAII, U.S.A.

THIS WORK WAS PREPARED BY ME OR UNDER MY SUPERVISION. CONSTRUCTION OF THIS PROJECT WILL BE UNDER MY OBSERVATION.
SIGNATURE

MARK	DATE	DESCRIPTION
1	2014-04-10	ADDED DUCT DIMENSION SIZES, AND DETAIL NUMBERING

REVIEWED: DEPARTMENT OF PARKS AND RECREATION — DATE

COUNTY OF HAWAI'I
DEPARTMENT OF PARKS & RECREATION
101 PAUAHI STREET, SUITE 6 / HILO, HAWAII 96720 / PHONE: 808.961.8311 / FAX: 808.961.8411

PAHOA PARK MASTER PLAN
PHASE I - BID SUBMITTAL 2014-02-10

JOB NO.: PR-4234 — PAHOA, PUNA, HAWAII — TMK: (3) 1-5-002:020

PLAN SHEET DESCRIPTION: ELECTRICAL PULLBOX DETAILS

DESIGNED BY:
DRAWN BY:
CHECKED BY:

SHEET NO. EGI008 — 1 OF SHEETS

DATE: 2014-02-10

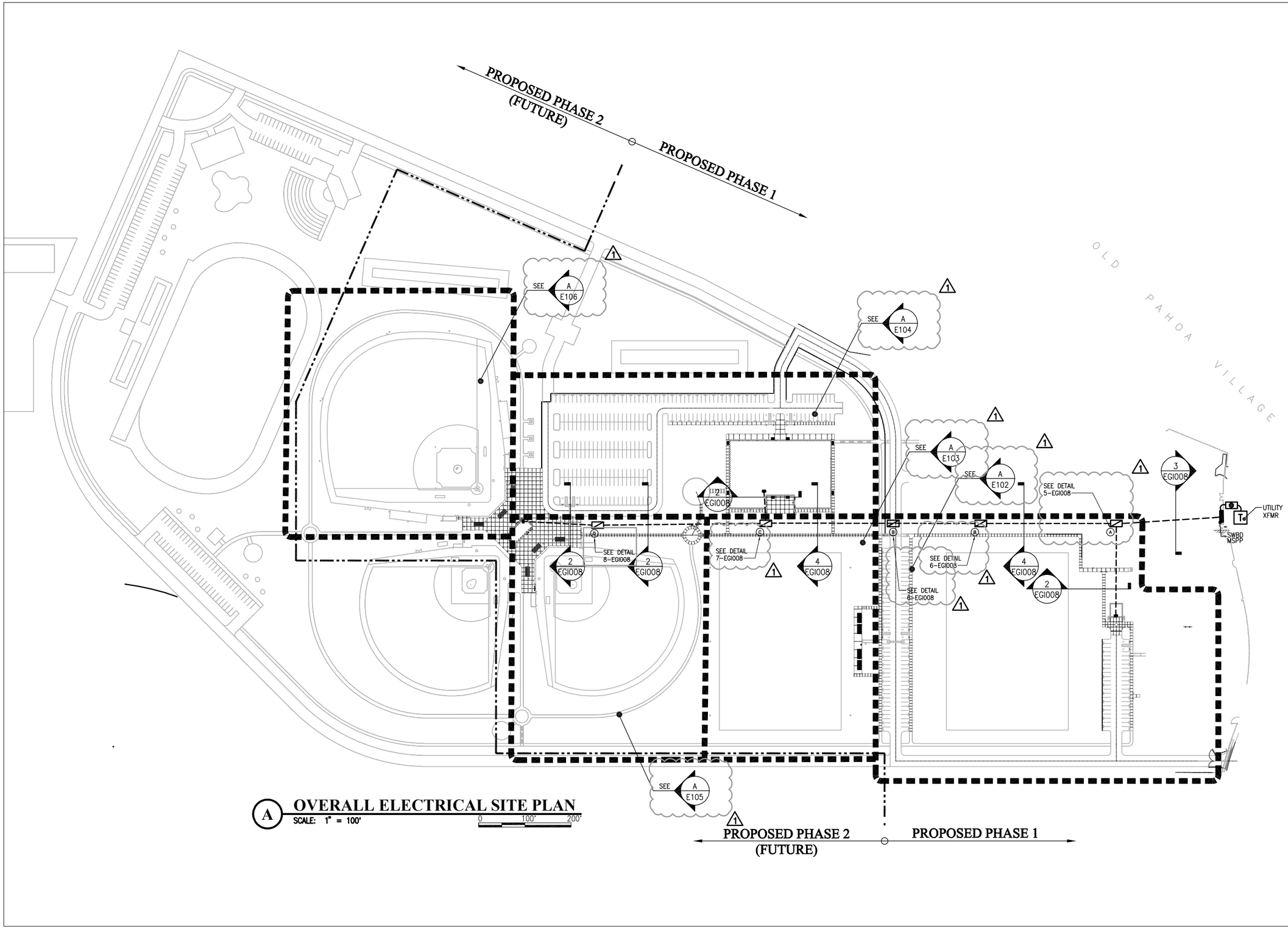

A OVERALL ELECTRICAL SITE PLAN

SCALE: 1" = 100'

0 100' 200'

Engineering Partners, Inc.
Progressive Solutions
455 ELANIKAULA STREET
HILO, HAWAII, 96720
www.epintegrated.com

CHRISTOPHER J. LOVETT
LICENSED PROFESSIONAL ENGINEER
Exp. 04/30/14
No. 14689-C
HAWAII, U.S.A.

THIS WORK WAS PREPARED BY ME OR UNDER MY SUPERVISION. CONSTRUCTION OF THIS PROJECT WILL BE UNDER MY OBSERVATION.

SIGNATURE

MARK	DATE	DESCRIPTION
1	2014-04-10	CHANGED CALLOUT LOCATIONS, PULLBOX CALLOUTS

REVIEWED:

DEPARTMENT OF PARKS AND RECREATION DATE

COUNTY OF HAWAI'I
DEPARTMENT OF PARKS & RECREATION
101 PAUAHI STREET, SUITE 6 | HILO, HAWAII 96720 | PHONE: 808.961.8311 | FAX: 808.961.8411

PAHOA PARK MASTER PLAN
PHASE I - BID SUBMITTAL 2014-02-10

JOB NO.: PR-4234 PAHOA, PUNA, HAWAII TMK: (3) 1-5-002:020

PLAN SHEET DESCRIPTION: OVERALL ELECTRICAL SITE PLAN

DESIGNED BY:
DRAWN BY:
CHECKED BY:

SHEET NO. E101

1 OF SHEETS

DATE: 2014-02-10

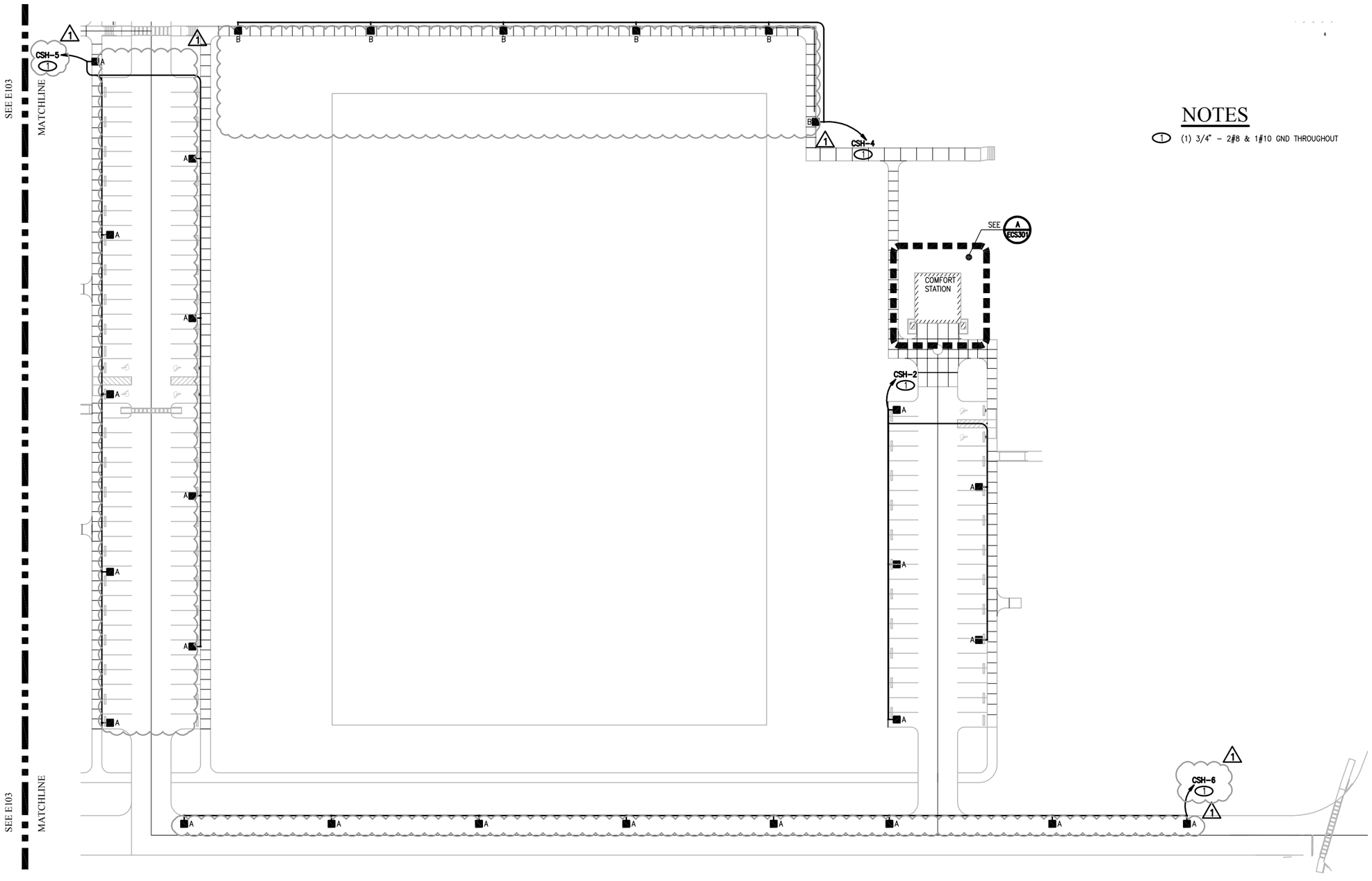

NOTES

1. (1) 3/4" – 2#8 & 1#10 GND THROUGHOUT

A ENLARGED ELECTRICAL SITE PLAN

SCALE: 1/32" = 1'-0"

0 32' 64'

Engineering Partners, Inc.
Progressive Solutions
455 ELANIKAULA STREET
HILO, HAWAII, 96720
www.epintegrated.com

CHRISTOPHER J. LOVETT
LICENSED PROFESSIONAL ENGINEER
Exp. 04/30/14
No. 14689-C
HAWAII, U.S.A.

THIS WORK WAS PREPARED BY ME OR UNDER MY SUPERVISION. CONSTRUCTION OF THIS PROJECT WILL BE UNDER MY OBSERVATION.

SIGNATURE

MARK	DATE	DESCRIPTION
1	2014-04-10	ADDED FIXTURE TYPES & CHANGED HOMERUN LOCATIONS

REVIEWED:

DEPARTMENT OF PARKS AND RECREATION DATE

COUNTY OF HAWAI'I
DEPARTMENT OF PARKS & RECREATION
101 PAUAHI STREET; SUITE 6 / HILO, HAWAII 96720 / PHONE: 808.961.8311 / FAX: 808.961.8411

PAHOA PARK MASTER PLAN
PHASE I - BID SUBMITTAL 2014-02-10

JOB NO.: PR-4234 PAHOA, PUNA, HAWAII TMK: (3) 1-5-002:020

PLAN SHEET DESCRIPTION: ENLARGED ELECTRICAL SITE PLAN

DESIGNED BY:
DRAWN BY:
CHECKED BY:

SHEET NO. E102

1 OF SHEETS

DATE: 2014-02-10

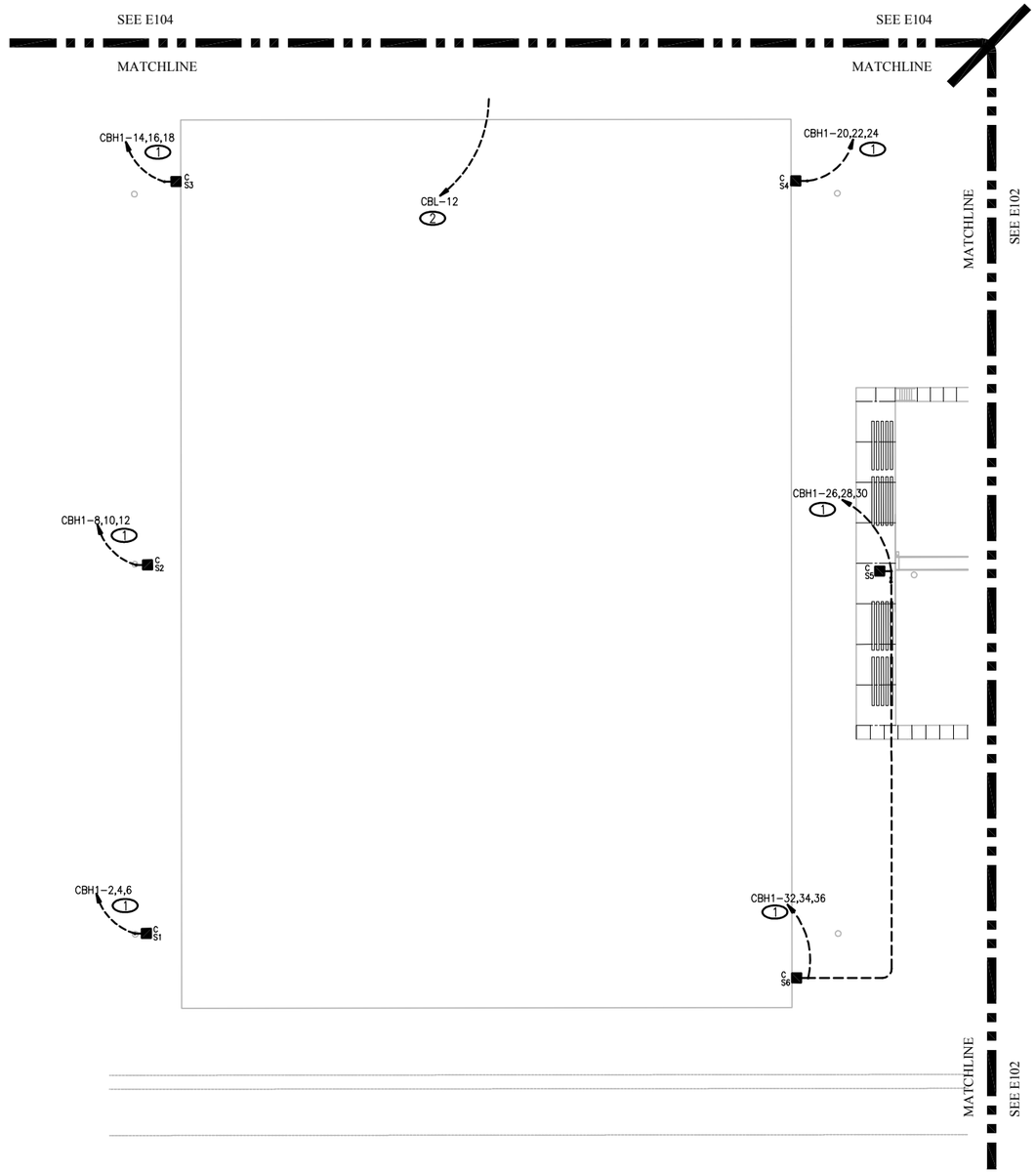

A ENLARGED ELECTRICAL SITE PLAN

SCALE: 1/32" = 1'-0"

0 32' 64'

NOTICES

1. REFER TO SHEET EG1004/EG1005 FOR ADDITIONAL FIELD LIGHTING DETAILS

NOTES

1. (1) 1 1/4" – 4#4 & 1#8 GND. THROUGHOUT
2. (1) 1" – 2#6 & 1#8 GND. THROUGHOUT

Engineering Partners, Inc.
Progressive Solutions
455 ELANIKAULA STREET
HILO, HAWAII, 96720
www.epintegrated.com

CHRISTOPHER J. LOVETT
LICENSED PROFESSIONAL ENGINEER
Exp. 04/30/14
No. 14689-C
HAWAII, U.S.A.

THIS WORK WAS PREPARED BY ME OR UNDER MY SUPERVISION. CONSTRUCTION OF THIS PROJECT WILL BE UNDER MY OBSERVATION.

SIGNATURE

MARK	DATE	DESCRIPTION
1	2014-04-10	ADDED NOTICES

REVIEWED:

DEPARTMENT OF PARKS AND RECREATION DATE

COUNTY OF HAWAI'I
DEPARTMENT OF PARKS & RECREATION
101 PAUAHI STREET, SUITE 6 / HILO, HAWAII 96720 / PHONE: 808.961.8311 / FAX: 808.961.8411

PAHOA PARK MASTER PLAN
PHASE I - BID SUBMITTAL 2014-02-10

JOB NO.: PR-4234 PAHOA, PUNA, HAWAII TMK: (3) 1-5-002:020

PLAN SHEET DESCRIPTION: ENLARGED ELECTRICAL SITE PLAN

DESIGNED BY:
DRAWN BY:
CHECKED BY:

SHEET NO. E103

1 OF SHEETS

DATE: 2014-02-10

NOTES

1. (1) 1 3/4" – 2 #8 & 1 #10 GND. THROUGHOUT

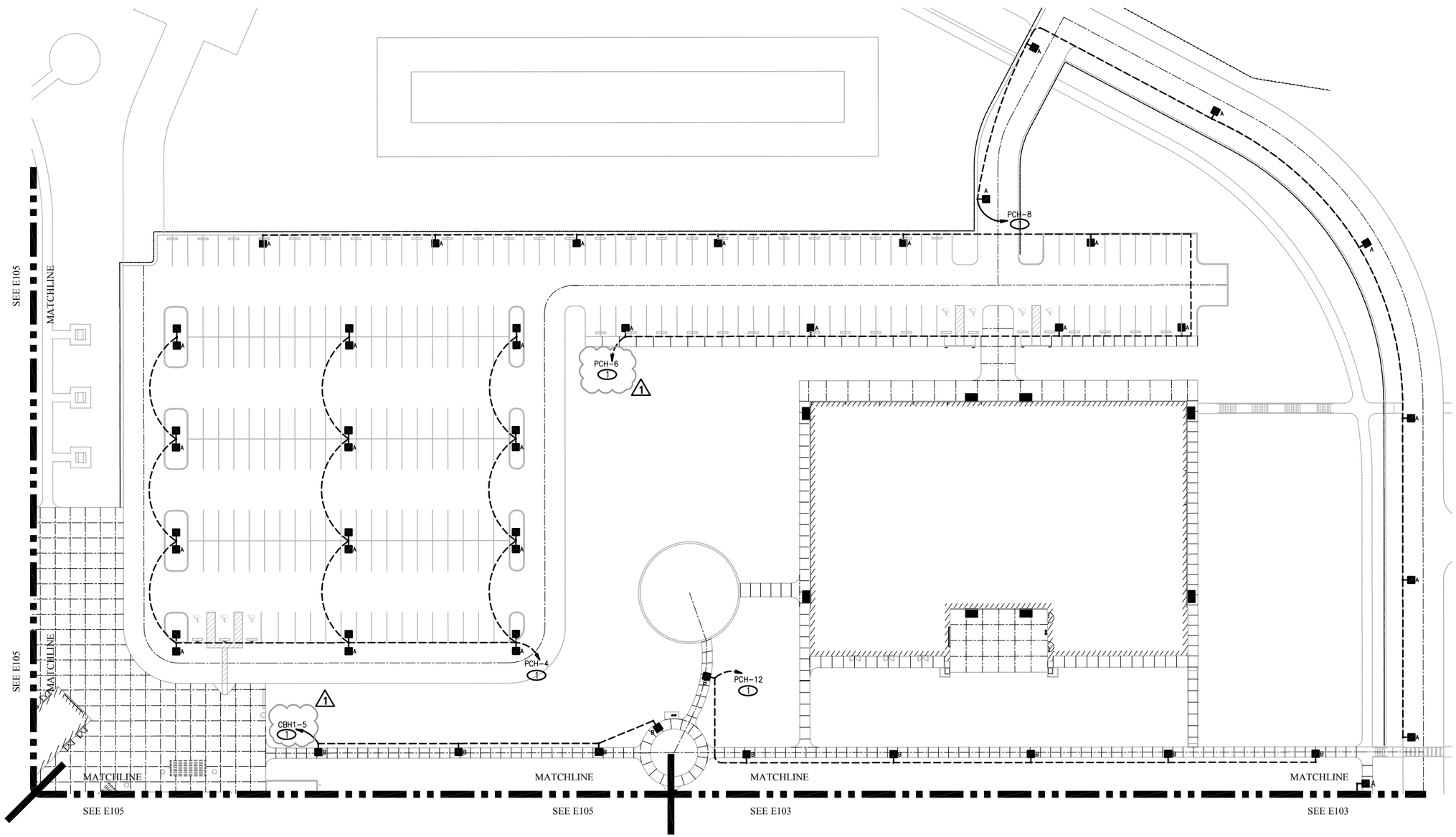

A ENLARGED ELECTRICAL SITE PLAN
SCALE: 1/32" = 1'-0"
0 32' 64'

Engineering Partners, Inc.
Progressive Solutions
455 ELANIKAULA STREET
HILO, HAWAII, 96720
www.epintegrated.com

CHRISTOPHER J. LOVETT
LICENSED PROFESSIONAL ENGINEER
Exp. 04/30/14
No. 14689-C
HAWAII, U.S.A.

THIS WORK WAS PREPARED BY ME OR UNDER MY SUPERVISION. CONSTRUCTION OF THIS PROJECT WILL BE UNDER MY OBSERVATION.
SIGNATURE

MARK	DATE	DESCRIPTION
1	2014-04-10	CHANGED HOMERUN LOCATION

REVIEWED:
DEPARTMENT OF PARKS AND RECREATION
DATE

COUNTY OF HAWAI'I
DEPARTMENT OF PARKS & RECREATION
101 PAUAHI STREET, SUITE 6 / HILO, HAWAII 96720 / PHONE: 808.961.8311 / FAX: 808.961.8411

PAHOA PARK MASTER PLAN
PHASE I - BID SUBMITTAL 2014-02-10

JOB NO.: PR-4234
PAHOA, PUNA, HAWAII
TMK: (3) 1-5-002:020

PLAN SHEET DESCRIPTION: ENLARGED ELECTRICAL SITE PLAN

DESIGNED BY:
DRAWN BY:
CHECKED BY:

SHEET NO.
E104
1 OF SHEETS

DATE:
2014-02-10

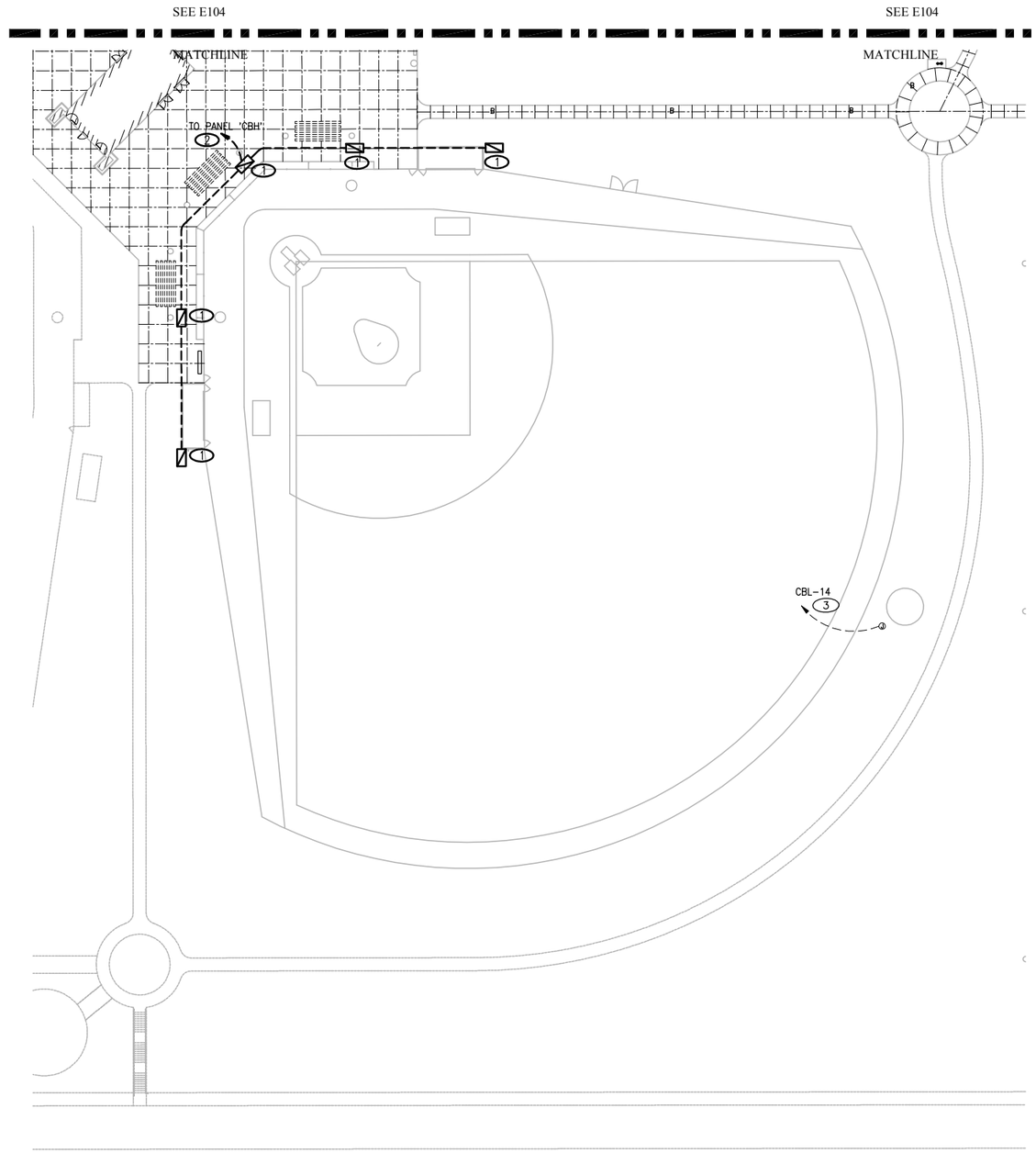

A ENLARGED ELECTRICAL SITE PLAN

SCALE: 1/32" = 1'-0"

0 32' 64'

NOTICES

1. REFER TO SHEET EG1004/EG1005 FOR ADDITIONAL FIELD LIGHTING DETAILS

NOTES

1. PROVIDE 18" X 24" PULL BOX FOR CONNECTION TO FUTURE LIGHTS. INTERCONNECT WITH (2) 2" PVC CONDUITS AND HOMERUN TO ELECTRICAL ROOM IN COMFORT BOOTH FOR CONNECTION TO PANEL 'CBH'
2. (2) 2" PVC TO COMFORT BOOTH ELECTRICAL ROOM
3. (1) 1" -2 #6 & 1 #8 GND.

Engineering Partners, Inc.
Progressive Solutions
455 ELANIKAULA STREET
HILO, HAWAII, 96720
www.epintegrated.com

CHRISTOPHER J. LOVETT
LICENSED PROFESSIONAL ENGINEER
Exp. 04/30/14
No. 14689-C
HAWAII, U.S.A.

THIS WORK WAS PREPARED BY ME OR UNDER MY SUPERVISION AND CONSTRUCTION OF THIS PROJECT WILL BE UNDER MY OBSERVATION.

SIGNATURE

MARK	DATE	DESCRIPTION
1	2014-04-10	ADDED NOTICES

REVIEWED:

DEPARTMENT OF PARKS AND RECREATION DATE

COUNTY OF HAWAI'I
DEPARTMENT OF PARKS & RECREATION
101 PAUAHI STREET, SUITE 6 / HILO, HAWAII 96720 / PHONE: 808.961.8311 / FAX: 808.961.8411

PAHOA PARK MASTER PLAN
PHASE I - BID SUBMITTAL 2014-02-10

JOB NO.: PR-4234 PAHOA, PUNA, HAWAII TMK: (3) 1-5-002:020

PLAN SHEET DESCRIPTION: ENLARGED ELECTRICAL SITE PLAN

DESIGNED BY:
DRAWN BY:
CHECKED BY:

SHEET NO. E105

1 OF SHEETS

DATE: 2014-02-10

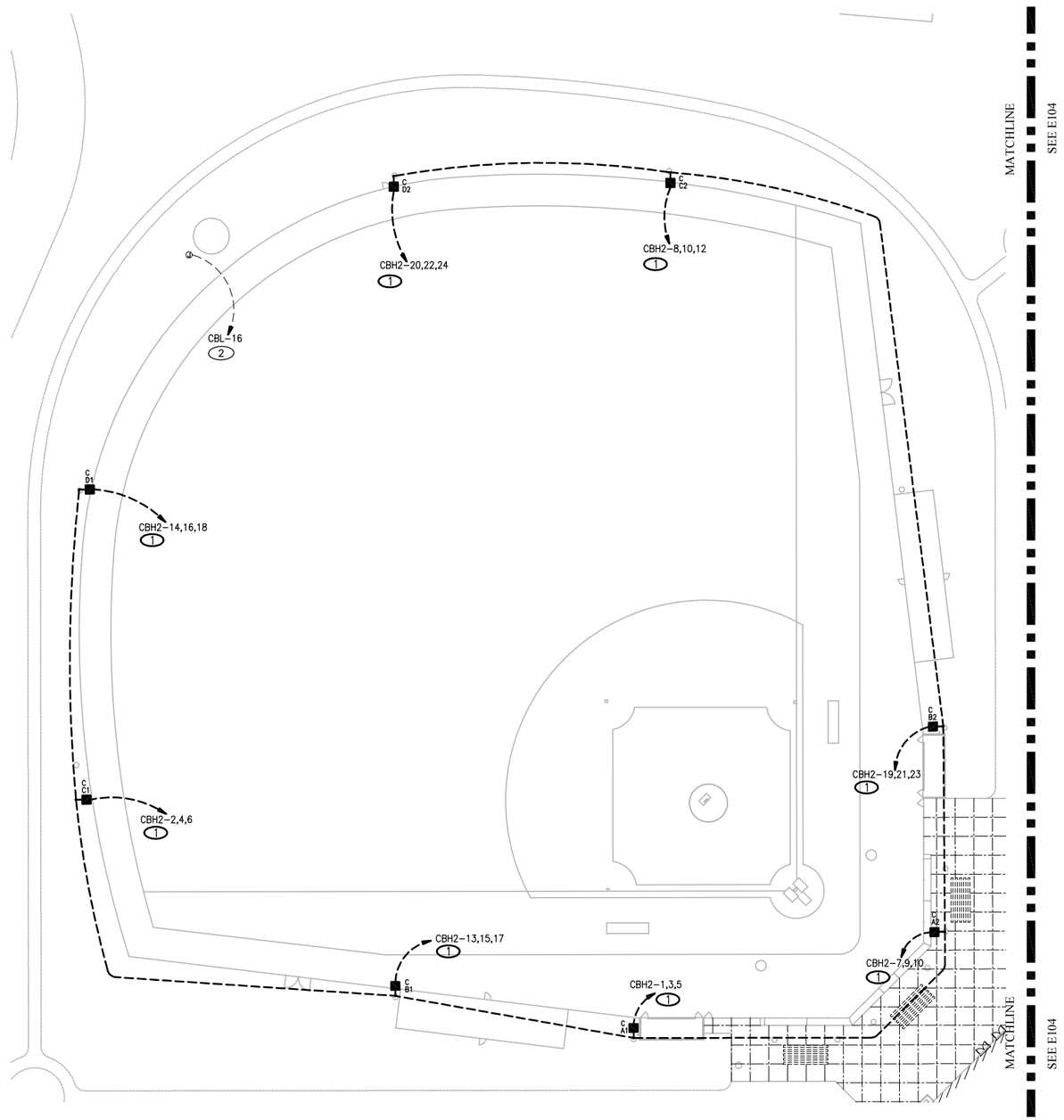

A **ENLARGED ELECTRICAL SITE PLAN**
SCALE: 1/32" = 1'-0"
0 32' 64'

NOTICES

1. REFER TO SHEET EG1004/EG1005 FOR ADDITIONAL FIELD LIGHTING DETAILS

NOTES

1. (1) 1 1/4" - 4 #4 & 1 #8 GND. THROUGHOUT
2. (1) 1" - 2 #6 & 1 #8 GND.

Engineering Partners, Inc.
Progressive Solutions
455 ELANIKAULA STREET
HILO, HAWAII, 96720
www.epintegrated.com

CHRISTOPHER J. LOVETT
LICENSED PROFESSIONAL ENGINEER
Exp. 04/30/14
No. 14689-E
HAWAII, U.S.A.

THIS WORK WAS PREPARED BY ME OR UNDER MY SUPERVISION. CONSTRUCTION OF THIS PROJECT WILL BE UNDER MY OBSERVATION.
SIGNATURE

MARK	DATE	DESCRIPTION
1	2014-04-10	ADDED NOTICES

REVIEWED:
DEPARTMENT OF PARKS AND RECREATION DATE

COUNTY OF HAWAI'I
DEPARTMENT OF PARKS & RECREATION
101 PAUAHI STREET, SUITE 6 / HILO, HAWAII 96720 / PHONE: 808.981.8311 / FAX: 808.981.8411

PAHOA PARK MASTER PLAN
PHASE I - BID SUBMITTAL 2014-02-10

JOB NO.: PR-4234 PAHOA, PUNA, HAWAII TMK: (3) 1-5-002:020

PLAN SHEET DESCRIPTION: ENLARGED ELECTRICAL SITE PLAN

DESIGNED BY:
DRAWN BY:
CHECKED BY:

SHEET NO. E106
1 OF SHEETS
DATE: 2014-02-10

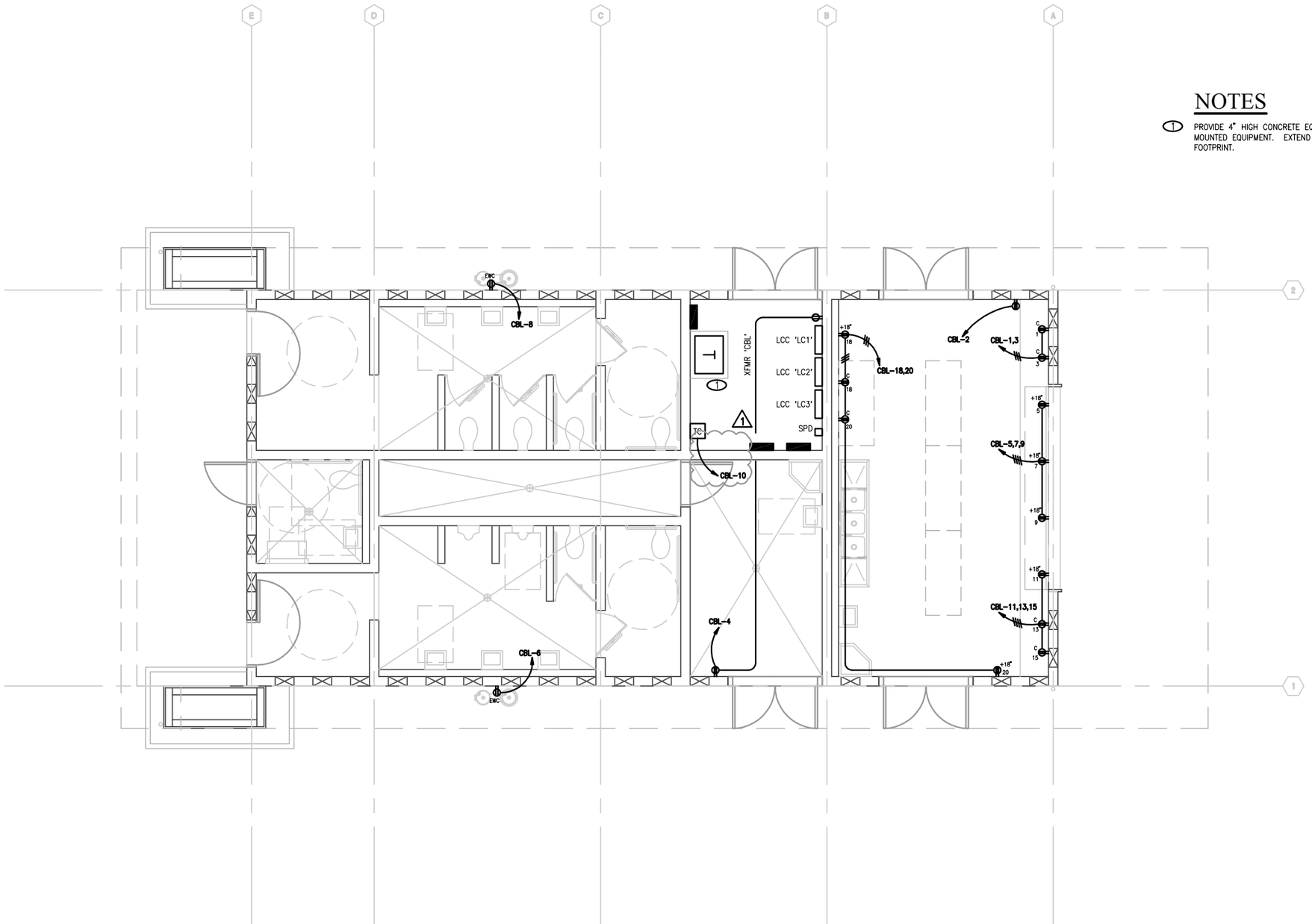

NOTES

1. PROVIDE 4" HIGH CONCRETE EQUIPMENT PAD AROUND FLOOR MOUNTED EQUIPMENT. EXTEND PAD 4" BEYOND EQUIPMENT FOOTPRINT.

A ENLARGED POWER PLAN - CONCESSION BOOTH

SCALE: 1/4" = 1'-0"

0 4' 8'

Engineering Partners, Inc.
Progressive Solutions
455 ELANIKAULA STREET
HILO, HAWAII, 96720
www.epintegrated.com

CHRISTOPHER J. LOVETT
LICENSED PROFESSIONAL ENGINEER
Exp. 04/30/14
No. 14689-C
HAWAII, U.S.A.

THIS WORK WAS PREPARED BY ME OR UNDER MY SUPERVISION. CONSTRUCTION OF THIS PROJECT WILL BE UNDER MY OBSERVATION.

SIGNATURE

MARK	DATE	DESCRIPTION
1	2014-04-10	ADDED HOMERUN LOCATION

REVIEWED:

DEPARTMENT OF PARKS AND RECREATION DATE

COUNTY OF HAWAI'I
DEPARTMENT OF PARKS & RECREATION
101 PAUAHI STREET, SUITE 6 / HILO, HAWAII 96720 / PHONE: 808.961.8311 / FAX: 808.961.8411

PAHOA PARK MASTER PLAN
PHASE I - BID SUBMITTAL 2014-02-10

JOB NO.: PR-4234 PAHOA, PUNA, HAWAII TMK: (3) 1-5-002:020

PLAN SHEET DESCRIPTION: ENLARGED POWER PLAN - CONCESSION BOOTH

DESIGNED BY:
DRAWN BY:
CHECKED BY:

SHEET NO.
ECB101
1 OF SHEETS

DATE:
2014-02-10

NOTES

1. CIRCUIT VIA TIME CLOCK ON AT DUSK, OFF AT 10PM

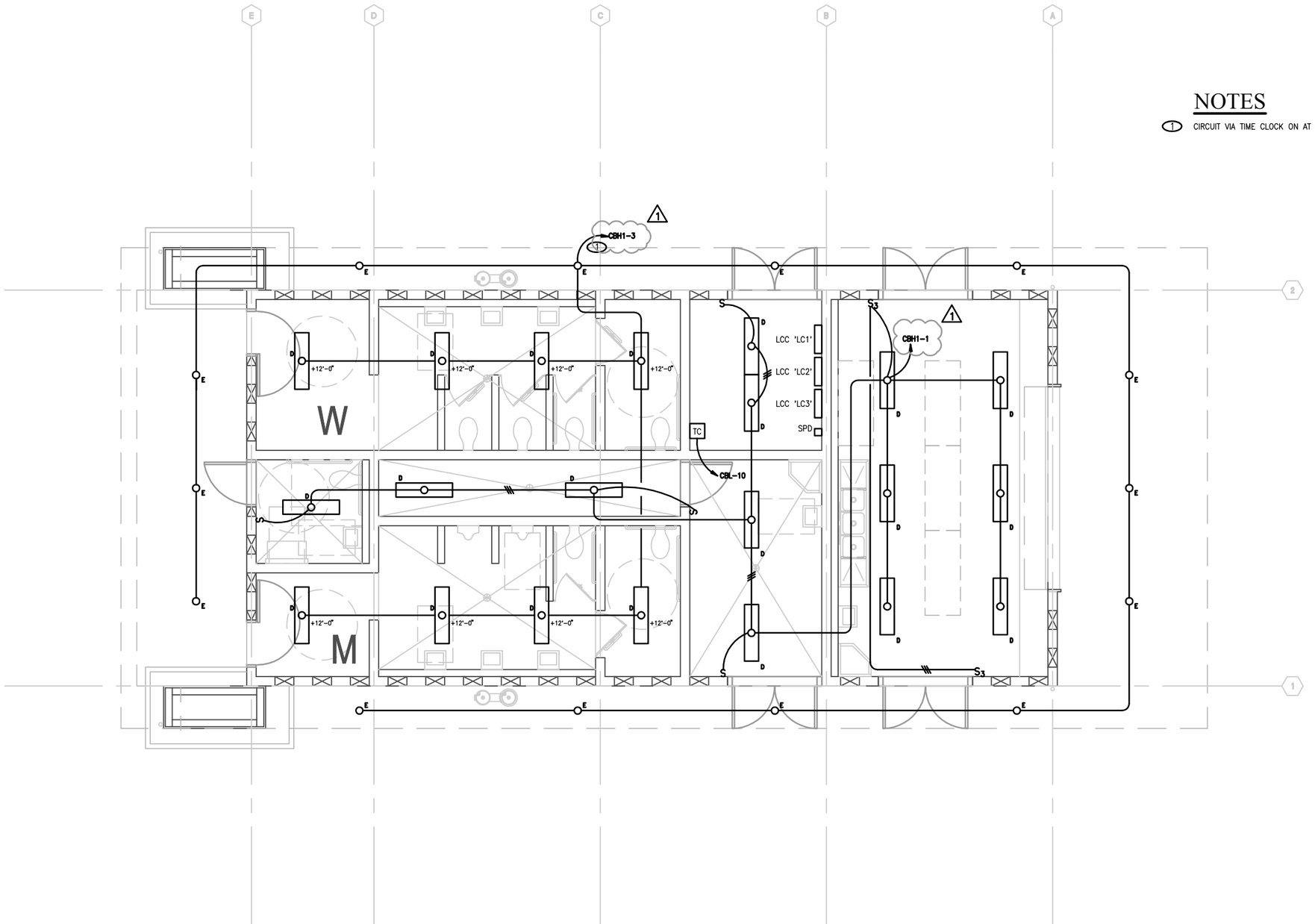

A ENLARGED LIGHTING PLAN - CONCESSION BOOTH

SCALE: 1/4" = 1'-0"

0 4' 8'

Engineering Partners, Inc.
Progressive Solutions
455 ELANIKAULA STREET
HILO, HAWAII, 96720
www.epintegrated.com

CHRISTOPHER J. LOVETT
LICENSED PROFESSIONAL ENGINEER
Exp. 04/30/14
No. 14689-C
HAWAII, U.S.A.

THIS WORK WAS PREPARED BY ME OR UNDER MY SUPERVISION. CONSTRUCTION OF THIS PROJECT WILL BE UNDER MY OBSERVATION.

SIGNATURE

MARK	DATE	DESCRIPTION
1	2014-04-10	CHANGED HOMERUN LOCATIONS

REVIEWED:

DEPARTMENT OF PARKS AND RECREATION DATE

COUNTY OF HAWAI'I
DEPARTMENT OF PARKS & RECREATION
101 PAUAHI STREET, SUITE 6 / HILO, HAWAII 96720 / PHONE: 808.961.8311 / FAX: 808.961.8411

PAHOA PARK MASTER PLAN
PHASE I - BID SUBMITTAL 2014-02-10

JOB NO.: PR-4234 PAHOA, PUNA, HAWAII TMK: (3) 1-5-002:020

PLAN SHEET DESCRIPTION: ENLARGED LIGHTING PLAN - CONCESSION BOOTH

DESIGNED BY:
DRAWN BY:
CHECKED BY:

SHEET NO. ECB102

1 OF SHEETS

DATE: 2014-02-10

NOTES

1. CIRCUIT VIA TIME CLOCK ON AT DUSK, OFF AT 10PM
2. TRAPEZE MOUNT TRANSFORMER ABOVE PANEL 'CSC'

A **ENLARGED ELECTRICAL PLAN - COMFORT STATION**

SCALE: 1/4" = 1'-0"

0 4' 8'

Engineering Partners, Inc.
Progressive Solutions
455 ELANIKAULA STREET
HILO, HAWAII, 96720
www.epintegrated.com

CHRISTOPHER J. LOVETT
LICENSED PROFESSIONAL ENGINEER
Exp. 04/30/14
No. 14689-C
HAWAII, U.S.A.

THIS WORK WAS PREPARED BY ME OR UNDER MY SUPERVISION. CONSTRUCTION OF THIS PROJECT WILL BE UNDER MY OBSERVATION.

SIGNATURE

MARK	DATE	DESCRIPTION
1	2014-04-10	CHANGED HOMERUN LOCATION & NOTE #2

REVIEWED:

DEPARTMENT OF PARKS AND RECREATION DATE

COUNTY OF HAWAI'I
DEPARTMENT OF PARKS & RECREATION
101 PAUAHI STREET, SUITE 6 / HILO, HAWAII 96720 / PHONE: 808.961.8311 / FAX: 808.961.8411

PAHOA PARK MASTER PLAN
PHASE I - BID SUBMITTAL 2014-02-10

JOB NO.: PR-4234 PAHOA, PUNA, HAWAII TMK: (3) 1-5-002:020

PLAN SHEET DESCRIPTION: ENLARGED ELECTRICAL PLAN - COMFORT STATION

DESIGNED BY:
DRAWN BY:
CHECKED BY:

SHEET NO. ECS101

1 OF SHEETS

DATE: 2014-02-10

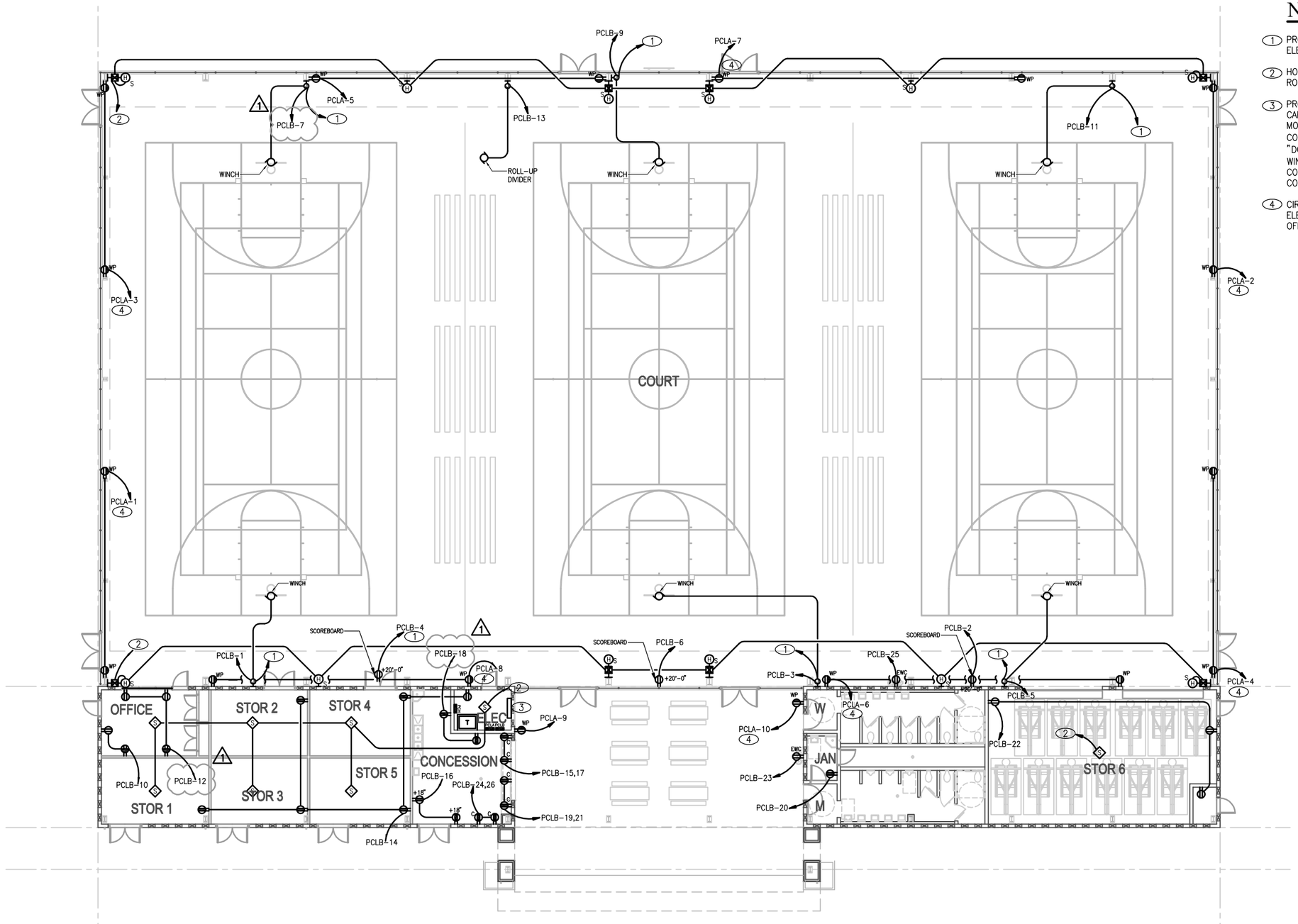

A **ENLARGED POWER PLAN - PLAY COURTS**

SCALE: 3/16" = 1'-0"

0 4' 8'

NOTES

1. PROVIDE CONNECTION TO KEY SWITCHED IN ELECTRICAL ROOM CABINET.
2. HOMERUN CABLING TO FACP IN ELECTRICAL ROOM.
3. PROVIDE WALL MOUNTED 2-DOOR METAL CABINET WITH PLYWOOD BACKBOARD FOR MOUNTING TIME SWITCHES. FIRE ALARM CONTROL PANEL, ONE "UP" AND ONE "DOWN" KEY SWITCH FOR EACH BACKBOARD WINCH, TEN (10) TWO-POLE SWITCHES FOR COURT LIGHTS, AND KEY SWITCH FOR COURT DIVIDER.
4. CIRCUIT RECEPTACLKE VIA TIME SWITCH IN ELECTRICAL ROOM CABINET 6AM ON, 10PM OFF.

Engineering Partners, Inc.
Progressive Solutions
455 ELANIKAULA STREET
HILO, HAWAII, 96720
www.epintegrated.com

CHRISTOPHER J. LOVETT
LICENSED PROFESSIONAL ENGINEER
Exp. 04/30/14
No. 14689-C
HAWAII, U.S.A.

THIS WORK WAS PREPARED BY ME OR UNDER MY SUPERVISION. CONSTRUCTION OF THIS PROJECT WILL BE UNDER MY OBSERVATION.

SIGNATURE

MARK	DATE	DESCRIPTION
1	2014-04-10	CHANGED HOMERUN LOCATIONS

REVIEWED:

DEPARTMENT OF PARKS AND RECREATION — DATE

COUNTY OF HAWAI'I
DEPARTMENT OF PARKS & RECREATION
101 PAUAHI STREET, SUITE 6 / HILO, HAWAII 96720 / PHONE: 808.961.8311 / FAX: 808.961.8411

PAHOA PARK MASTER PLAN
PHASE I - BID SUBMITTAL 2014-02-10

JOB NO.: PR-4234 — PAHOA, PUNA, HAWAII — TMK: (3) 1-5-002:020

PLAN SHEET DESCRIPTION: ENLARGED POWERL PLAN - PLAY COURTS

DESIGNED BY:
DRAWN BY:
CHECKED BY:

SHEET NO. EPC101

1 OF SHEETS

DATE: 2014-02-10

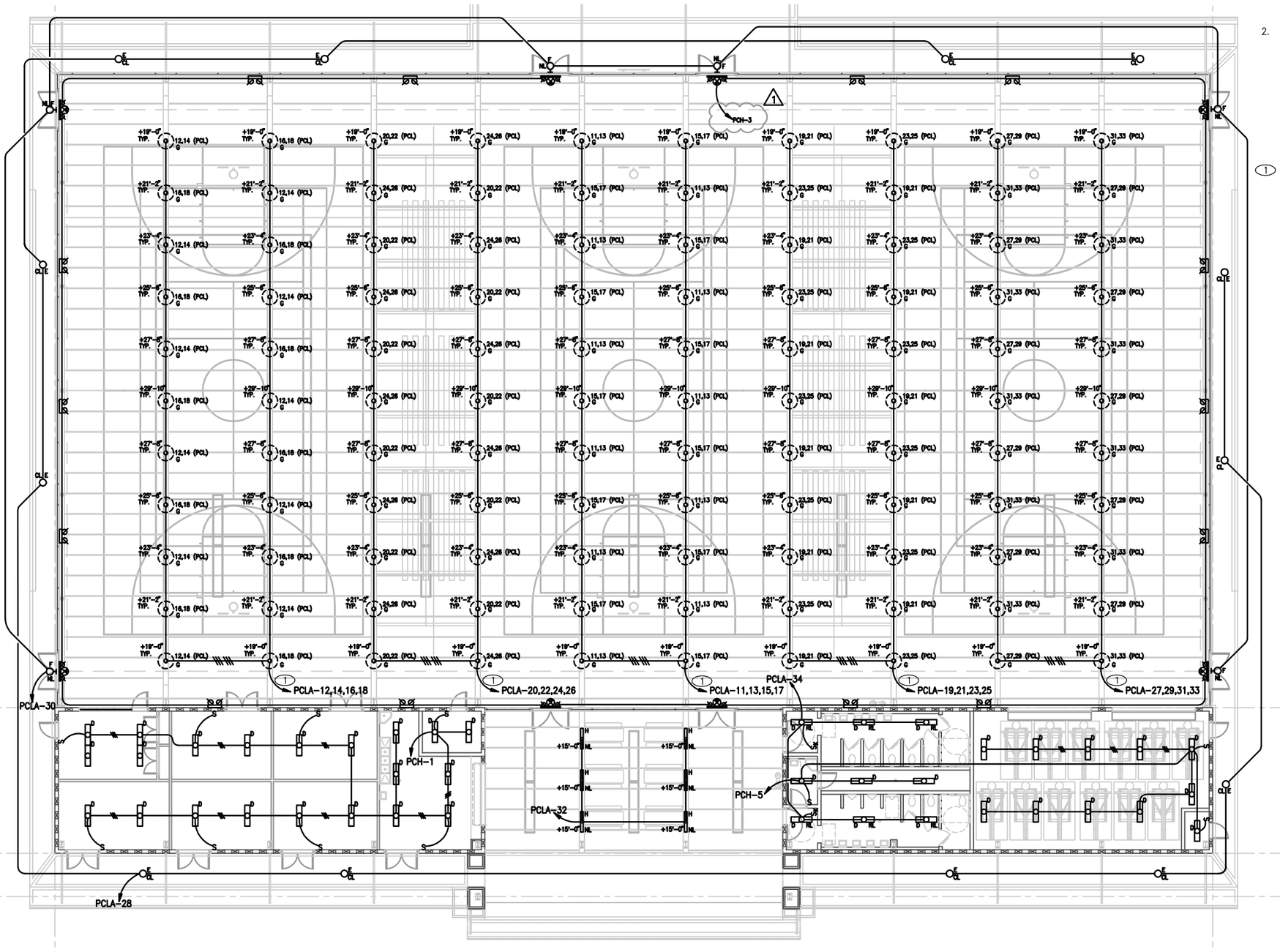

A ENLARGED LIGHTING PLAN - PLAY COURTS

SCALE: 3/32" = 1'-0"

0 4' 8'

NOTICES

1. TIME CLOCK SETTINGS SHALL BE AS FOLLOWS:
   PCL: ON AT 5:00PM, OFF AT 10:05PM
   CL: ON AT 9:45PM, OFF AT 10:05PM
   NL: ON AT 10:00PM, OFF AT 5:00AM
   RL: ON AT DUSK, OFF AT 10PM
2. ALL LIGHTS SHALL HAVE BYPASS SWITCH CAPABLE OF OVERRIDING TIME CLOCK SETTINGS. REFER TO 1/E502 FOR ADDITIONAL DETAILS.

NOTES

1 (1) 1"-6 #10 & 1 #10 GND

Engineering Partners, Inc.
Progressive Solutions
455 ELANIKAULA STREET
HILO, HAWAII, 96720
www.epintegrated.com

CHRISTOPHER J. LOVETT
LICENSED PROFESSIONAL ENGINEER
Exp. 04/30/14
No. 14689-C
HAWAII, U.S.A.

THIS WORK WAS PREPARED BY ME OR UNDER MY SUPERVISION. CONSTRUCTION OF THIS PROJECT WILL BE UNDER MY OBSERVATION.

SIGNATURE

MARK	DATE	DESCRIPTION
1	2014-04-10	ADDED HOMERUN LOCATION

REVIEWED:

DEPARTMENT OF PARKS AND RECREATION DATE

COUNTY OF HAWAI'I
DEPARTMENT OF PARKS & RECREATION
101 PAUAHI STREET, SUITE 6 / HILO, HAWAII 96720 / PHONE: 808.961.8311 / FAX: 808.961.8411

PAHOA PARK MASTER PLAN
PHASE I - BID SUBMITTAL 2014-02-10

JOB NO.: PR-4234 PAHOA, PUNA, HAWAII TMK: (3) 1-5-002:020

PLAN SHEET DESCRIPTION: ENLARGED LIGHTING PLAN - PLAY COURTS

DESIGNED BY:
DRAWN BY:
CHECKED BY:

SHEET NO. EPC102

1 OF SHEETS

DATE: 2014-02-10

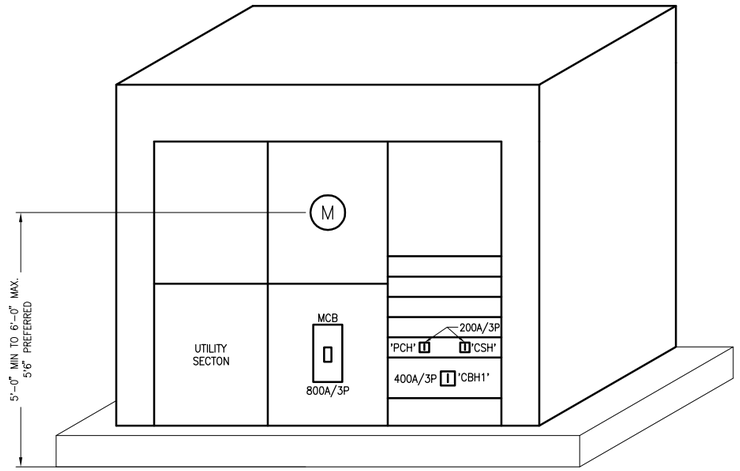

1 ELEVATION DIAGRAM

SCALE: NO SCALE

FEEDER SCHEDULE			
FDR. NO.	DESCRIPTION	CONDUIT AND WIRE SIZE (75°C CU 600V)	CONDUIT AND WIRE SIZE (75°C AL 600V) (AA-8000 COMPACT STRANDING)
P3	15KVA XFMR 480V PRIMARY FEEDER (25A MOCP)	(1) 3/4"-3 #10 & 1 #10 GND.	N/A
P1	30KVA XFMR 480V PRIMARY FEEDER (45A MOCP)	(1) 1"-3 #6 & 1 #10 GND.	N/A
P2	75KVA XFMR 480V PRIMARY FEEDER (110A MOCP)	(1) 1 1/2"-3 #1 & 1 #6 GND.	N/A
S3	15KVA XFMR 208V SECONDARY FEEDER (60A MOCP)	(1) 1"-4 #6 & 1 #8 GND.	N/A
S1	30KVA XFMR 208V SECONDARY FEEDER (100A MOCP)	(1) 1 1/2"-4 #1 & 1 #6 GND.	N/A
S2	75KVA XFMR 208V SECONDARY FEEDER (225A MOCP)	(1) 2 1/2"-4 #4/0 & 1 #2 GND.	(1) 3"-4 #300KCMIL & 1 #2 CU GND.
S3	500KVA XFMR 480V SECONDARY SERVICE ENTRANCE (800A MOCP)	(3) 4" EA. W/4 #300KCM	(3) 4" EA. W/4 #400KCMIL
46	200A, DISTRIBUTUION FEEDER	(1) 2"-4 #3/0 & 1 #6 GND. 1	(1) 2"-4 #250KCMIL & 1 #6 CU GND.
47	400A, DISTRIBUTUION FEEDER	(1) 4"-4 #500KCMIL & 1 #2 GND.	(1) 4"-4 #750KCMIL & 1 #2 CU GND.
48	200A, DISTRIBUTION FEEDER, 1500', 480V, 3ø, 4W	(3) 4" EA. W/4 #350KCMIL & 1 #2/0 GND.	(3) 4" EA. W/4 #600KCMIL & 1 #3/0 GND.
49	200A, DISTRIBUTION FEEDER, 1000', 480V, 3ø, 4W	(1) 4"-4 #300KCMIL & 1 #3 GND.	(1) 4"-4 #500KCMIL & 1 #3 CU GND.
50	200A, DISTRIBUTION FEEDER, 500', 480V, 3ø, 4W	(1) 4"-4 #250KCMIL & 1 #2 GND.	(1) 4"-4 #350KCMIL & 1 #4 CU GND.

NOTES:
1. SOME FEEDERS MAY NOT BE USED ON THIS PROJECT.
2. VOLTAGE DROP MAY REQUIRE THE USE OF A LARGER AMPACITY FEEDER.

NOTES

1. PROVIDE DRY-TYPE TRANSFORMER, 480V, 3ø, 3W, DELTA TO 208/120V, 3ø, 4W, WYE, 115°C RISE, 200° CLASS INSULATION AND KVA SIZE AS SHOWN
2. PROVIDE #2/0 CU PER NEC 250.52(A)(S)
3. PROVIDE SUPPLEMENTAL #2/0 PER NEC 250.56.
4. CONNECT UTILITY CONNECTION F.B.O.
5. PROVIDE GROUND SIZED AS INDICATED PER NEC 250.30.

SERVICE / LOAD DATA
COMMERCIAL BUILDING

A. ELECTRIC

1. SERVICE VOLTAGE: 480/277V, 3ø, 4W
2. TYPE OF SERVICE: UNDER GROUND
3. ESTIMATED CONNECTED KVA: 324.5 KVA
   ESTIMATED DEMAND KVA: 227.15 KVA
4. ESTIMATED AVERAGE MEASURED: 227.15 KVA
   TOTAL DEMAND KVA:
5. DESIGN SERVICE CAPACITY: 800 AMPERES 1
   SERVICE CONDUCTORS: (3) #300 AWG COPPER
6. METERING: RATE SCH J, HELCO STD. B-19 (13 JAW, CLASS 200 METER SOCKET)
7. BILLING ADDRESS: DEPT. OF PARKS & RECREATION, 101 PAUAHI ST., SUITE 6, HILO, HI 96720

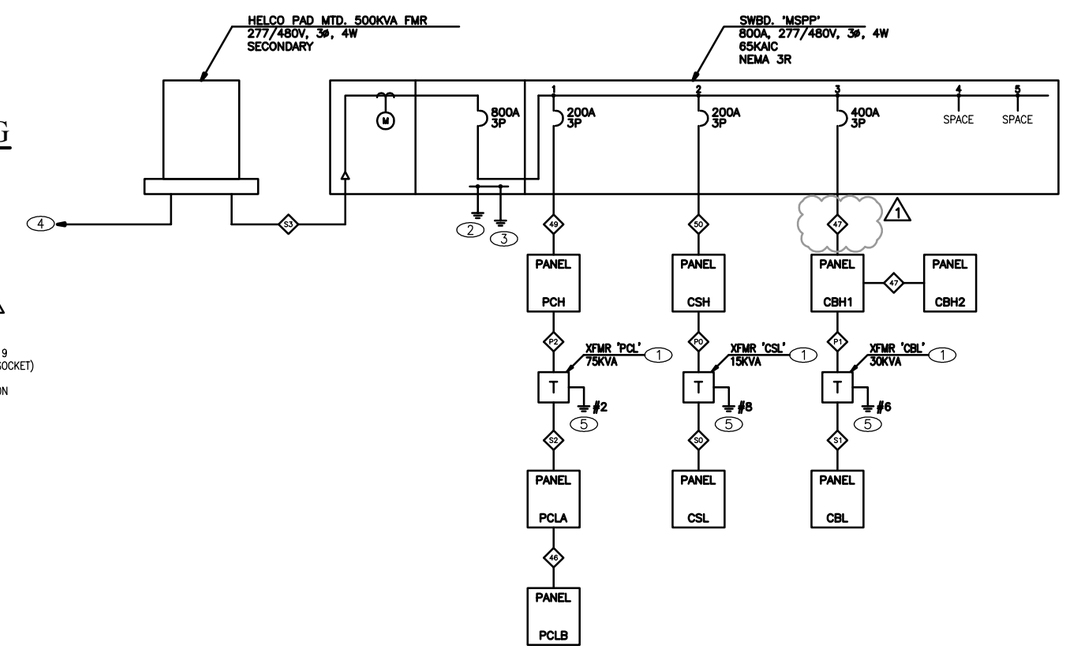

1 ELECTRICAL SINGLE LINE DIAGRAM

SCALE: NO SCALE

Engineering Partners, Inc.
Progressive Solutions
455 ELANIKAULA STREET
HILO, HAWAII, 96720
www.epintegrated.com

CHRISTOPHER J. LOVETT, LICENSED PROFESSIONAL ENGINEER, Exp. 04/30/14, No. 14689-C, HAWAII, U.S.A.

THIS WORK WAS PREPARED BY ME OR UNDER MY SUPERVISION. CONSTRUCTION OF THIS PROJECT WILL BE UNDER MY OBSERVATION.

SIGNATURE

MARK	DATE	DESCRIPTION
1	2014-04-10	CHANGE FEEDER, FEEDER SCHEDULE, 3PVC CONDUCTORS

REVIEWED: DEPARTMENT OF PARKS AND RECREATION DATE

COUNTY OF HAWAI'I
DEPARTMENT OF PARKS & RECREATION
101 PAUAHI STREET, SUITE 6 / HILO, HAWAII 96720 / PHONE: 808.961.8311 / FAX: 808.961.8411

PAHOA PARK MASTER PLAN
PHASE I - BID SUBMITTAL 2014-02-10

TMK: (3) 1-5-002:020

PAHOA, PUNA, HAWAII

JOB NO.: PR-4234

PLAN SHEET DESCRIPTION: ELECTRICAL SINGLE LINE DIAGRAM

DESIGNED BY:
DRAWN BY:
CHECKED BY:

SHEET NO. E501

1 OF SHEETS

DATE: 2014-02-10

PANEL: PCH

VOLTAGE: 208 / 120 3Ø 4W — CIRCUIT CODE: blank or N: NON-CONTINUOUS; L: LONG-CONTINUOUS; R: DEMANDABLE RECEPTACLES; K: KITCHEN
BUS: 225A
DATE: 2/10/14 2:42 PM — MAINS: 200A M.C.B. — LOCATION: PLAYCOURT ELEC RM
JOB: 14066-12-01 — AIC RATING: 14,000 — MOUNTING: SURFACE — NO. OF EQUIPMENT: 0

CKT NO	CODE	TRIP	POLE	DESCRIPTION	(NOTE)	M	R	L	ØA	ØB	ØC	ØA	ØB	ØC	L	R	M	(NOTE)	DESCRIPTION	TRIP	POLE	CODE	CKT NO
1	L	20	1	STORAGE / OFFICE LTG				21	840			810			9			1	PARKING LOT LIGHTING	20	1	L	2
3		20	1	EMERG. LTG.				22		550			2160		24			1	PARKING LOT LIGHTING	20	1	L	4
5	L	20	1	STORAGE / JANITOR CLOSET				14			560			900	10			1	PARKING LOT LIGHTING	20	1	L	6
7		20	1	SPARE					–			630			7			1	ROADWAY LIGHTING	20	1	L	8
9		20	1	SPARE						–			–		8				SPARE	20	1		10
11		20	1	SPARE							–			360	6			1	WALKWAY LIGHTING	20	1	L	12
13		20	1	SPARE					–			–							SPARE	20	1		14
15		20	1	SPARE						–			–						SPARE	20	1		16
17		20	1	SPARE							–			–					SPARE	20	1		18
19		20	1	SPARE					–			–							SPARE	20	1		20
21		20	1	SPARE						–			–						SPARE	20	1		22
23		20	1	SPARE							–			–					SPARE	20	1		24
25		20	1	SPARE					–			–							SPARE	20	1		26
27		20	1	SPARE						–			–						SPARE	20	1		28
29		20	1	SPARE							–			–					SPARE	20	1		30
31		20	1	SPARE					–			–							SPARE	20	1		32
33		20	1	SPARE						–			–						SPARE	20	1		34
35		20	1	SPARE							–			–					SPARE	20	1		36
37		110		XFMR 'PCL'					18400			–							SPARE	20	1		38
39				---						18400			–						SPARE	20	1		40
41			3	---							18400			–					SPARE	20	1		42

PANEL NOTES: — PHASE TOTALS: ØA: 20680 — ØB: 21110 — ØC: 20220

1. CONTACTOR CONTROLLED VIA PHOTOCELL/TIMECLOCK.

TOTAL CONNECTED VA	62010
CONNECTED VA (CODE N)	55750
CONNECTED VA (CODE L)	6260
CONNECTED VA (CODE R)	0
CONNECTED VA (CODE K)	0
PANEL CONNECTED KVA	62.0
PANEL DEMAND KVA	63.6
PANEL DEMAND AMPS	176.5
HIGH Ø AMPS w/ DEMAND	180.3

PANEL: CBH1

VOLTAGE: 480 / 277 3Ø 4W — CIRCUIT CODE: blank or N: NON-CONTINUOUS; L: LONG-CONTINUOUS; R: DEMANDABLE RECEPTACLES; K: KITCHEN
BUS: 400A
DATE: 2/7/14 9:16 AM — MAINS: 400A MCB — LOCATION: COMFORT BOOTH ELEC RM
JOB: 14066-12-01 — AIC RATING: 14,000 — MOUNTING: SURFACE — NO. OF EQUIPMENT: 0

CKT NO	CODE	TRIP	POLE	DESCRIPTION	(NOTE)	M	R	L	ØA	ØB	ØC	ØA	ØB	ØC	L	R	M	(NOTE)	DESCRIPTION	TRIP	POLE	CODE	CKT NO
1	L	20	1	CONCESSION/STORAGE LTG				13	520			7180						2	MULTI-PURPOSE (S-1)	30			2
3	L	20	1	RESTROOM/OUTDOOR	1			12		480			7180					2	--				4
5	L	20	1	WALKWAY LIGHTING	1			4			240			7180				2	--		3		6
7		20	1	SPARE					–			7180						2	MULTI-PURPOSE (S-2)	30			8
9		20	1	SPARE						–			7180					2	--				10
11		20	1	SPARE							–			7180				2	--		3		12
13		20	1	SPARE					–			7180						2	MULTI-PURPOSE (S-3)	30			14
15		20	1	SPARE						–			7180					2	--				16
17		20	1	SPARE							–			7180				2	--		3		18
19		20	1	SPARE					–			7180						2	MULTI-PURPOSE (S-3)	30			20
21		20	1	SPARE						–			7180					2	--				22
23		20	1	SPARE							–			7180				2	--		3		24
25		20	1	SPARE					–			7180						2	MULTI-PURPOSE (S-3)	30			26
27		20	1	SPARE						–			7180					2	--				28
29		20	1	SPARE							–			7180				2	--		3		30
31		20	1	SPARE					–			7180						2	MULTI-PURPOSE (S-3)	30			32
33		20	1	SPARE						–			7180					2	--				34
35		20	1	SPARE							–			7180				2	--		3		36
37		45		XFMR 'CBL'					1080			–							SPARE	20	1		38
39				---						1400			–						SPARE	20	1		40
41			3	---							720			–					SPARE	20	1		42

PANEL NOTES: — PHASE TOTALS: ØA: 44680 — ØB: 44960 — ØC: 44040

1. CONTACTOR CONTROLLED VIA PHOTOCELL/TIMECLOCK.
2. CONTACTOR CONTROLLED VIA FIELD LIGHTING CONTROL PANEL.

PROVIDE PANEL WITH FEED THRU LUGS

TOTAL CONNECTED VA	133680
CONNECTED VA (CODE N)	132440
CONNECTED VA (CODE L)	1240
CONNECTED VA (CODE R)	0
CONNECTED VA (CODE K)	0
PANEL CONNECTED KVA	133.7
PANEL DEMAND KVA	134.0
PANEL DEMAND AMPS	161.2
HIGH Ø AMPS w/ DEMAND	162.7

PANEL: CSH

1 (revision mark)

VOLTAGE: 480 / 277 3Ø 4W — CIRCUIT CODE: blank or N: NON-CONTINUOUS; L: LONG-CONTINUOUS; R: DEMANDABLE RECEPTACLES; K: KITCHEN
BUS: 225A
DATE: 4/8/14 9:53 AM — MAINS: 200 M.C.B. — LOCATION: JANITOR'S CLOSET
JOB: 14066-12-01 — AIC RATING: 14,000 — MOUNTING: SURFACE — NO. OF EQUIPMENT: 0

CKT NO	CODE	TRIP	POLE	DESCRIPTION	(NOTE)	M	R	L	ØA	ØB	ØC	ØA	ØB	ØC	L	R	M	(NOTE)	DESCRIPTION	TRIP	POLE	CODE	CKT NO
1	L	20	1	OUTDOOR LTG.	1			12	480			450			5			1	PARKING LOT LIGHTS	20	1	L	2
3	L	20	1	JANITORS CLOSET LTG.				3		180			360		6			1	WALKWAY LIGHTS	20	1	L	4
5	L	20	1	PARKING LOT LIGHTS	1			9			810			720	8			1	DRIVE LANE LIGHTS	20	1	L	6
7		20	1	SPARE					–			–							SPARE	20	1		8
9		20	1	SPARE						–			–						SPARE	20	1		10
11		20	1	SPARE							–			–					SPARE	20	1		12
13		20	1	SPARE					–			–							SPARE	20	1		14
15		20	1	SPARE						–			–						SPARE	20	1		16
17		20	1	SPARE							–			–					SPARE	20	1		18
19		20	1	SPARE					–			–							SPARE	20	1		20
21		20	1	SPARE						–			–						SPARE	20	1		22
23		20	1	SPARE							–			–					SPARE	20	1		24
25		20	1	SPARE					–			–							SPARE	20	1		26
27		20	1	SPARE						–			–						SPARE	20	1		28
29		20	1	SPARE							–			–					SPARE	20	1		30
31		20	1	SPARE					–			–							SPARE	20	1		32
33		20	1	SPARE						–			–						SPARE	20	1		34
35		20	1	SPARE							–			–					SPARE	20	1		36
37		25		XFMR 'CSL'		1			180			–							SPARE	20	1		38
39				---						180			–						SPARE	20	1		40
41			3	---							180			–					SPARE	20	1		42

PANEL NOTES: — PHASE TOTALS: ØA: 1110 — ØB: 720 — ØC: 1710

1. CONTRACTOR CONTROLLED VIA PHOTOCELL/TIMECLOCK

TOTAL CONNECTED VA	3540
CONNECTED VA (CODE N)	540
CONNECTED VA (CODE L)	3000
CONNECTED VA (CODE R)	0
CONNECTED VA (CODE K)	0
PANEL CONNECTED KVA	3.5
PANEL DEMAND KVA	4.3
PANEL DEMAND AMPS	5.2
HIGH Ø AMPS w/ DEMAND	7.6

PANEL: PCLA

VOLTAGE: 208 / 120 3Ø 4W — CIRCUIT CODE: blank or N: NON-CONTINUOUS; L: LONG-CONTINUOUS; R: DEMANDABLE RECEPTACLES; K: KITCHEN
BUS: 225A
DATE: 2/10/14 4:54 PM — MAINS: 225A M.C.B — LOCATION: PLAY COURT ELEC RM.
JOB: 14066-12-01 — AIC RATING: 10,000 — MOUNTING: SURFACE — NO. OF EQUIPMENT: 0

CKT NO	CODE	TRIP	POLE	DESCRIPTION	(NOTE)	M	R	L	ØA	ØB	ØC	ØA	ØB	ØC	L	R	M	(NOTE)	DESCRIPTION	TRIP	POLE	CODE	CKT NO
1	R	20	1	PLAY COURT RECEPT	1		2		360			360				2		1	PLAY COURT RECEPT	20	1	R	2
3	R	20	1	PLAY COURT RECEPT	1		2			360			360			2		1	PLAY COURT RECEPT	20	1	R	4
5	R	20	1	PLAY COURT RECEPT	1		2				360			360		2		1	PLAY COURT RECEPT	20	1	R	6
7	R	20	1	PLAY COURT RECEPT	1		2		360			360				2		1	PLAY COURT RECEPT	20	1	R	8
9	R	20	1	OUTDOOR RECEPT	1		3			180			180			1		1	OUTDOOR RECEPT	20	1	R	10
11	L	20		PLAYCOURT LTG (PCL)	2			14			1260			1260	14			2	PLAYCOURT LTG (PCL)	20		L	12
13	L		2	---	2				1260			1260						2	---		2	L	14
15	L	20		PLAYCOURT LTG (PCL)	2			14		1260			1260		14			2	PLAYCOURT LTG (PCL)	20		L	16
17	L		2	---	2						1260			1260				2	---		2	L	18
19	L	20		PLAYCOURT LTG (PCL)	2			14	1260			1260			14			2	PLAYCOURT LTG (PCL)	20		L	20
21	L		2	---	2					1260			1260					2	---		2	L	22
23	L	20		PLAYCOURT LTG (PCL)	2			14			1260			1260	14			2	PLAYCOURT LTG (PCL)	20		L	24
25	L		2	---	2				1260			1260						2	---		2	L	26
27	L	20		PLAYCOURT LTG (PCL)	2			14		1260			780		13			3	OUTDOOR LTG	20	1	L	28
29	L		2	---	2						1260			360	6			3	OUTDOOR LTG	20	1	L	30
31	L	20		PLAYCOURT LTG (PCL)	2			14	1260			540			18			3	ENTRY DOOR LTG	20	1	L	32
33	L		2	---	2					1260			360		6			4	RESTROOM LTG	20	1	L	34
35		20	1	SPARE							–			–					SPARE	20	1		36
37		20	1	SPARE					–			–							SPARE	20	1		38
39		20	1	SPARE						–			–						SPARE	20	1		40
41		20	1	SPARE							–			–					SPARE	20	1		42

PANEL NOTES: — PHASE TOTALS: ØA: 10800 — ØB: 9780 — ØC: 9900

1.) CONTACTOR CONTROL VIA TIME SWITCH 6AM ON, 10PM, OFF. (PLAY COURT RECEPTS)
2.) CONTACTOR CONTROL VIA TIME SWITCH AND MANUAL OVERIDE SWITCH IN CABINET. (PLAY COURT LIGHTS)
3.) CONTACT CONTROL VIA TIME SWITCH (CURFEW LTS, NIGHT LIGHTS, RESTROOM LIGHTS

PROVIDE PANEL WITH FEED THROUGH LUGS

TOTAL CONNECTED VA	30480
CONNECTED VA (CODE N)	0
CONNECTED VA (CODE L)	27240
CONNECTED VA (CODE R)	3240
CONNECTED VA (CODE K)	0
PANEL CONNECTED KVA	30.5
PANEL DEMAND KVA	37.3
PANEL DEMAND AMPS	103.5
HIGH Ø AMPS w/ DEMAND	109.4

PANEL: CBH2

VOLTAGE: 480 / 277 3Ø 4W — CIRCUIT CODE: blank or N: NON-CONTINUOUS; L: LONG-CONTINUOUS; R: DEMANDABLE RECEPTACLES; K: KITCHEN
BUS: 400A
DATE: 2/7/14 9:16 AM — MAINS: 400A L.O. — LOCATION: COMFORT BOOTH ELEC RM
JOB: 14066-12-01 — AIC RATING: 14,000 — MOUNTING: SURFACE — NO. OF EQUIPMENT: 0

CKT NO	CODE	TRIP	POLE	DESCRIPTION	(NOTE)	M	R	L	ØA	ØB	ØC	ØA	ØB	ØC	L	R	M	(NOTE)	DESCRIPTION	TRIP	POLE	CODE	CKT NO
1		30		BASEBALL FIELD (A1)	1				4105			4100						1	BASEBALL FIELD (C1)	30			2
3				--	1					4105			4100					1	--				4
5			3	--	1						4105			4100				1	--		3		6
7		30		BASEBALL FIELD (A2)	1				4105			4100						1	BASEBALL FIELD (C2)	30			8
9				--	1					4105			4100					1	--				10
11			3	--	1						4105			4100				1	--		3		12
13		30		BASEBALL FIELD (B1)	1				8200			4100						1	BASEBALL FIELD (D1)	30			14
15				--	1					8200			4100					1	--				16
17			3	--	1						8200			4100				1	--		3		18
19		30		BASEBALL FIELD (B2)	1				8200			4100						1	BASEBALL FIELD (D2)	30			20
21				--	1					8200			4100					1	--				22
23			3	--	1						8200			4100				1	--		3		24
25		20	1	SPARE					–			–							SPARE	20	1		26
27		20	1	SPARE						–			–						SPARE	20	1		28
29		20	1	SPARE							–			–					SPARE	20	1		30
31		20	1	SPARE					–			–							SPARE	20	1		32
33		20	1	SPARE						–			–						SPARE	20	1		34
35		20	1	SPARE							–			–					SPARE	20	1		36
37		20	1	SPARE					–			–							SPARE	20	1		38
39		20	1	SPARE						–			–						SPARE	20	1		40
41		20	1	SPARE							–			–					SPARE	20	1		42

PANEL NOTES: — PHASE TOTALS: ØA: 41010 — ØB: 41010 — ØC: 41010

1. CONTACTOR CONTROLLED VIA FIELD LIGHTING CONTROL SYSTEM.

TOTAL CONNECTED VA	123030
CONNECTED VA (CODE N)	123030
CONNECTED VA (CODE L)	0
CONNECTED VA (CODE R)	0
CONNECTED VA (CODE K)	0
PANEL CONNECTED KVA	123.0
PANEL DEMAND KVA	123.0
PANEL DEMAND AMPS	148.0
HIGH Ø AMPS w/ DEMAND	148.0

PANEL: CSL

VOLTAGE: 208 / 120 3Ø 4W — CIRCUIT CODE: blank or N: NON-CONTINUOUS; L: LONG-CONTINUOUS; R: DEMANDABLE RECEPTACLES; K: KITCHEN
BUS: 125A
DATE: 2/7/14 9:16 AM — MAINS: 60A M.C.B. — LOCATION: JANITOR'S CLOSET
JOB: 14066-12-01 — AIC RATING: 16,000 — MOUNTING: SURFACE — NO. OF EQUIPMENT: 0

CKT NO	CODE	TRIP	POLE	DESCRIPTION	(NOTE)	M	R	L	ØA	ØB	ØC	ØA	ØB	ØC	L	R	M	(NOTE)	DESCRIPTION	TRIP	POLE	CODE	CKT NO
1		20	1	JANITOR'S CLOSET					180			–							SPARE	20	1		2
3		20	1	E.W.C.						180			–						SPARE	20	1		4
5		20	1	TIMECLOCK							180			–					SPARE	20	1		6
7		20	1	SPARE					–			–							SPARE	20	1		8
9										–			–										10
11											–			–									12
13									–			–											14
15										–			–										16
17											–			–									18
19									–			–											20
21										–			–										22
23											–			–									24
25									–			–											26
27										–			–										28
29											–			–									30
31									–			–											32
33										–			–										34
35											–			–									36
37									–			–											38
39										–			–										40
41											–			–									42

PANEL NOTES: — PHASE TOTALS: ØA: 180 — ØB: 180 — ØC: 180

8 CIRCUIT PANEL

TOTAL CONNECTED VA	540
CONNECTED VA (CODE N)	540
CONNECTED VA (CODE L)	0
CONNECTED VA (CODE R)	0
CONNECTED VA (CODE K)	0
PANEL CONNECTED KVA	0.5
PANEL DEMAND KVA	0.5
PANEL DEMAND AMPS	1.5
HIGH Ø AMPS w/ DEMAND	1.5

PANEL: PCLB

VOLTAGE: 208 / 120 3Ø 4W — CIRCUIT CODE: blank or N: NON-CONTINUOUS; L: LONG-CONTINUOUS; R: DEMANDABLE RECEPTACLES; K: KITCHEN
BUS: 225A
DATE: 2/11/14 8:49 AM — MAINS: L.O. — LOCATION: PLAY COURT ELEC RM.
JOB: 14066-12-01 — AIC RATING: 10,000 — MOUNTING: SURFACE — NO. OF EQUIPMENT: 6

CKT NO	CODE	TRIP	POLE	DESCRIPTION	(NOTE)	M	R	L	ØA	ØB	ØC	ØA	ØB	ØC	L	R	M	(NOTE)	DESCRIPTION	TRIP	POLE	CODE	CKT NO
1		20	1	PC WINCH		1			1585			180				1			SCOREBOARD	20	1		2
3		20	1	PC WINCH		1				1585			180			1			SCOREBOARD	20	1		4
5		20	1	PC WINCH		1					1585			180		1			SCOREBOARD	20	1		6
7		20	1	PC WINCH		1			1585			–							SPARE	20	1		8
9		20	1	PC WINCH		1				1585			540			3			OFFICE	20	1	R	10
11		20	1	PC WINCH		1					1585			720		4			OFFICE	20	1	R	12
13		20	1	ROLL-UP DIVIDER		1			1920			1080				6			STORAGE	20	1	R	14
15	K	20	1	CONCESSION RECEPT			1			180			360			2			CONCESSION RECEPT	20	1	K	16
17	K	20	1	CONCESSION RECEPT			1				180			360		2			CONCESSION RECEPT	20	1	K	18
19	K	20	1	CONCESSION RECEPT			1		180			180				1			JANITOR'S CLOSET	20	1	R	20
21	K	20	1	CONCESSION RECEPT			1			180			540			3			STORAGE	20	1	R	22
23		20	1	EWC			1				180			180		1			CONCESSION RECEPT	20	1		24
25		20	1	EWC			1		180			180				1			CONCESSION RECEPT	20	1		26
27		20	1	SPARE						–			–						SPARE	20	1		28
29		20	1	SPARE							–			–					SPARE	20	1		30
31		20	1	SPARE					–			–							SPARE	20	1		32
33		20	1	SPARE						–			–						SPARE	20	1		34
35		20	1	SPARE							–			–					SPARE	20	1		36
37		20	1	SPARE					–			–							SPARE	20	1		38
39		20	1	SPARE						–			–						SPARE	20	1		40
41		20	1	SPARE							–			–					SPARE	20	1		42

PANEL NOTES: — PHASE TOTALS: ØA: 7070 — ØB: 5150 — ØC: 4970

TOTAL CONNECTED VA	17190
CONNECTED VA (CODE N)	12690
CONNECTED VA (CODE L)	0
CONNECTED VA (CODE R)	3060
CONNECTED VA (CODE K)	1440
PANEL CONNECTED KVA	17.2
PANEL DEMAND KVA	16.7
PANEL DEMAND AMPS	46.3
HIGH Ø AMPS w/ DEMAND	58.3

PANEL: CBL

VOLTAGE: 208 / 120 3Ø 4W — CIRCUIT CODE: blank or N: NON-CONTINUOUS; L: LONG-CONTINUOUS; R: DEMANDABLE RECEPTACLES; K: KITCHEN
BUS: 125A
DATE: 2/11/14 8:48 AM — MAINS: 100A M.C.B. — LOCATION: COMFORT BOOTH ELEC. RM.
JOB: 14066-12-01 — AIC RATING: 10,000 — MOUNTING: SURFACE — NO. OF EQUIPMENT: 0

CKT NO	CODE	TRIP	POLE	DESCRIPTION	(NOTE)	M	R	L	ØA	ØB	ØC	ØA	ØB	ØC	L	R	M	(NOTE)	DESCRIPTION	TRIP	POLE	CODE	CKT NO
1		20	1	CONCESSION RECEPT			1		180			360				2			CONCESSION RECEPT	20	1		2
3		20	1	CONCESSION RECEPT			1			180			360			2			JANITOR/ELEC RM	20	1		4
5		20	1	CONCESSION RECEPT			1				180			360		1			EWC	20	1		6
7		20	1	CONCESSION RECEPT			1		180			180				1			EWC	20	1		8
9		20	1	CONCESSION RECEPT			1			180			500				1		TIMECLOCK	20	1		10
11		20	1	CONCESSION RECEPT			1				180			1000					SCOREBOARD	20	1		12
13		20	1	CONCESSION RECEPT			1		180			1000							SCOREBOARD	20	1		14
15		20	1	CONCESSION RECEPT			1			180			1000						SCOREBOARD	20	1		16
17		20	1	SPARE							–			–					SPARE	20	1		18
19		20	1	SPARE					–			–							SPARE	20	1		20
21		20	1	SPARE						–			–						SPARE	20	1		22
23		20	1	SPARE							–			–					SPARE	20	1		24
25									–			–											26
27										–			–										28
29											–			–									30
31									–			–											32
33										–			–										34
35											–			–									36
37									–			–											38
39										–			–										40
41											–			–									42

PANEL NOTES: — PHASE TOTALS: ØA: 2080 — ØB: 2400 — ØC: 1720

24 CKT PANEL

TOTAL CONNECTED VA	6200
CONNECTED VA (CODE N)	6200
CONNECTED VA (CODE L)	0
CONNECTED VA (CODE R)	0
CONNECTED VA (CODE K)	0
PANEL CONNECTED KVA	6.2
PANEL DEMAND KVA	6.2
PANEL DEMAND AMPS	17.2
HIGH Ø AMPS w/ DEMAND	20.0

Engineering Partners, Inc.
Progressive Solutions
455 E LANIKAULA STREET
HILO, HAWAII, 96720
www.epintegrated.com

CHRISTOPHER J. LOVETT — LICENSED PROFESSIONAL ENGINEER — No. 14689-E — Exp. 04/30/14 — HAWAII, U.S.A.

THIS WORK WAS PREPARED BY ME OR UNDER MY SUPERVISION AND CONSTRUCTION OF THIS PROJECT WILL BE UNDER MY OBSERVATION.

SIGNATURE

MARK	DATE	DESCRIPTION
1	2014-04-10	CHANGES TO PANEL SCHEDULES

REVIEWED: — DEPARTMENT OF PARKS AND RECREATION — DATE

COUNTY OF HAWAI'I
DEPARTMENT OF PARKS & RECREATION
101 PAUAHI STREET, SUITE 6 / HILO, HAWAII 96720 / PHONE: 808.961.8311 / FAX: 808.961.8411

PAHOA PARK MASTER PLAN
PHASE I - BID SUBMITTAL 2014-02-10

JOB NO.: PR-4234 — PAHOA, PUNA, HAWAII — TMK: (3) 1-5-002:020

PLAN SHEET DESCRIPTION: ELECTRICAL PANEL SCHEDULES

DESIGNED BY:
DRAWN BY:
CHECKED BY:

SHEET NO. E601 — 1 OF SHEETS — DATE: 2014-02-10