GENERAL CONSTRUCTION NOTES

1. ALL WORK SHALL BE DONE IN ACCORDANCE WITH THE "STANDARD DETAILS FOR PUBLIC WORKS CONSTRUCTION", DATED SEPTEMBER 1984, "STANDARD SPECIFICATIONS FOR PUBLIC WORKS CONSTRUCTION", DATED SEPTEMBER 1986, AS AMENDED, OF THE DEPARTMENT OF PUBLIC WORKS, COUNTY OF HAWAII, THE "HAWAII STANDARD SPECIFICATION FOR ROAD AND BRIDGE CONSTRUCTION", DEPARTMENT OF TRANSPORTATION, HIGHWAYS DIVISION, 2005, AND AASHTO LRFD BRIDGE CONSTRUCTION SPECIFICATIONS, 3RD EDITION WITH 2010 INTERIM REVISIONS (AASHTO CONSTRUCTION SPECIFICATIONS), UNLESS INDICATED OTHERWISE IN THE PLANS, THESE NOTES, OR THE SPECIAL PROVISIONS. IN THE EVENT OF CONFLICTING PROVISIONS IN THE AASHTO CONSTRUCTION SPECIFICATIONS AND THE STATE STANDARD SPECIFICATIONS, THE STATE STANDARD SPECIFICATIONS SHALL APPLY.
2. SURVEY OF MONUMENT STAKEOUT SHALL BE MADE BY REGISTERED LAND SURVEYORS.
3. THE CONTRACTOR SHALL VERIFY THE LOCATION OF ALL EXISTING UTILITIES, WHETHER SHOWN ON THE PLAN OR NOT, AND SHALL BE RESPONSIBLE FOR THE REPAIR OR REPLACEMENT OF SAME IN THE EVENT OF DAMAGES DUE TO HIS CONSTRUCTION PRACTICES. THE CONTRACTOR SHALL COORDINATE HIS WORK WITH THE RESPECTIVE UTILITY COMPANIES.
4. THE CONTRACTOR SHALL MAINTAIN VEHICULAR AND PEDESTRIAN ACCESS TO EXISTING FACILITIES AT ALL TIMES AND SHALL SCHEDULE AND PROSECUTE HIS WORK IN SUCH A MANNER AS TO AVOID INTERRUPTION OF NORMAL ACTIVITIES AT THE EXISTING FACILITIES. THE CONTRACTOR SHALL PROVIDE EARLY NOTIFICATION OF AND OBTAIN APPROVAL FOR ANY ANTICIPATED INTERRUPTIONS. TEMPORARY SAFE PEDESTRIAN PASSAGEWAYS AROUND OR THROUGH A CONSTRUCTION SITE SHALL COMPLY WITH 2010 ADAAG STANDARDS.
5. THE CONTRACTOR SHALL PROVIDE AND INSTALL ALL TRAFFIC CONTROL DEVICES IN CONFORMANCE WITH THE CURRENT VERSION OF THE "MANUAL OF UNIFORM TRAFFIC CONTROL DEVICES FOR STREETS AND HIGHWAYS", AND TO THE SATISFACTION OF THE ENGINEER.
6. EXCEPT DURING ACTUAL WORKING HOURS, ALL SIGNS WHICH DO NOT PERTAIN TO THE CONSTRUCTION ACTIVITY, SUCH AS "MEN WORKING" AND "FLAGMAN AHEAD" SHALL BE COVERED OR LAID DOWN. HOWEVER ALL SIGNS NECESSARY FOR THE SAFETY OF THE PUBLIC SHALL BE MAINTAINED.
7. NO CONSTRUCTION EQUIPMENT SHALL BE PARKED WITHIN THE ROAD RIGHT-OF-WAY IN SUCH A MANNER THAT THE EQUIPMENT WILL OBSTRUCT THE NORMAL MOVEMENT AND SIGHT DISTANCE OF THE DRIVING MOTORIST, EXCEPT DURING ACTUAL WORKING HOURS.
8. ALL EXISTING PAVEMENTS, WALKS, UTILITIES, AND OTHER FACILITIES WHETHER SHOWN ON THE PLANS OR NOT, WHICH ARE DAMAGED BY THE CONTRACTOR SHALL BE RECONSTRUCTED OR REPLACED BY THE CONTRACTOR AT HIS OWN EXPENSE TO THE ORIGINAL UNDAMAGED CONDITION.
9. NO TRENCHING SHALL BE LEFT OPEN FOR MORE THAN FIVE (5) WORKING DAYS. CONTRACTOR SHALL PROPERLY BARRICADE ALL OPEN TRENCHES DURING ALL PHASES OF CONSTRUCTION.
10. EXISTING CONDITIONS ARE SHOWN TO THE BEST OF OUR KNOWLEDGE. DISCREPANCIES SHALL BE PROMPTLY BE REPORTED TO THE ENGINEER AND BE RESOLVED BEFORE PROCEEDING WITH THE WORK.
11. PRIOR TO COMMENCEMENT OF CONSTRUCTION, THE CONTRACTOR SHALL VERIFY THE LOCATIONS OF ALL UTILITIES, WHICH MAY BE AFFECTED BY HIS WORK. INTERFERENCE WITH THE STRUCTURE SHALL PROMPTLY BE REPORTED TO THE ENGINEER AND BE RESOLVED BEFORE PROCEEDING WITH THE WORK.
12. SHOULD A DISCREPANCY OCCUR ON THE DRAWINGS BETWEEN ANY PROJECT SPECIAL NOTES/ SPECIAL DETAILS, AND THE TYPICAL SPECS/TYPICAL DETAILS, SAID SPECIAL NOTES/SPECIAL DETAILS SHALL TAKE PRECEDANCE.

GRADING NOTES

1. ALL GRADING WORK SHALL CONFORM TO CHAPTER 10 OF THE HAWAII COUNTY CODE. SHOULD A GRADING PERMIT BE REQUIRED, NO WORK SHALL COMMENCE UNTIL THE DEPARTMENT OF PUBLIC WORKS APPROVES A GRADING PERMIT.
2. THE CONTRACTOR SHALL REMOVE ALL SILT AND DEBRIS DEPOSITED IN DRAINAGE FACILITIES, ROADWAYS AND OTHER AREAS RESULTING FROM HIS WORK. THE COSTS INCURRED FOR ANY NECESSARY REMEDIAL ACTION BY THE ENGINEER SHALL BE PAYABLE BY THE CONTRACTOR.
3. THE CONTRACTOR, AT HIS OWN EXPENSE, SHALL KEEP THE PROJECT AND SURROUNDING AREAS FREE FROM DUST NUISANCES. THE WORK SHALL BE IN CONFORMANCE WITH THE AIR POLLUTION CONTROL RULES OF THE STATE DEPARTMENT OF HEALTH, HAR 11-60.1. FUGITIVE DUST.
4. ALL GRADING OPERATIONS SHALL BE PERFORMED IN CONFORMANCE WITH THE APPLICABLE PROVISIONS OF THE HAWAII ADMINISTRATIVE RULES, TITLE 11, CHAPTER 55, WATER POLLUTION CONTROL AND CHAPTER 54, WATER QUALITY STANDARDS, AND TO THE EROSION AND SEDIMENTATION CONTROL STANDARDS AND GUIDELINES OF THE DEPARTMENT OF PUBLIC WORKS, COUNTY OF HAWAII.
5. THE CONTRACTOR SHALL SOD OR PLANT ALL SLOPES AND EXPOSED AREAS IMMEDIATELY AFTER THE GRADING WORK HAS BEEN COMPLETED.
6. THE CONTRACTOR SHALL INFORM THE DEPARTMENT OF PUBLIC WORKS OF THE LOCATIONS OF THE DISPOSAL AND/OR BORROW SITE(S) REQUIRED FOR THIS PROJECT WHEN AN APPLICATION FOR A GRADING PERMIT IS MADE. THE DISPOSAL AND/OR BORROW SITE(S) MUST ALSO FULFILL THE REQUIREMENTS OF THE GRADING ORDINANCE.
7. NO GRADING WORK SHALL BE DONE ON SATURDAYS, SUNDAYS AND HOLIDAYS ANYTIME WITHOUT PRIOR APPROVAL FROM THE OWNER. GRADING WORK ON NORMAL WORKING DAYS SHALL BE BETWEEN THE HOURS OF 7:00AM TO 3:30PM.
8. FILLS FOR ROADWAY SHALL BE COMPACTED TO 90 PERCENT (90%) OF MAXIMUM DENSITY PER ASTM D-1557 TEST.
9. THE CONTRACTOR SHALL VERIFY ALL LINES, LEVELS, ELEVATIONS, AND IMPROVEMENTS INDICATED ON THE DRAWINGS BEFORE ANY CLEARING, EXCAVATION OR CONSTRUCTION BEGINS. ANY DISCREPANCY SHALL BE IMMEDIATELY BROUGHT TO THE ATTENTION OF THE OWNER AND ANY CHANGE SHALL BE MADE IN ACCORDANCE WITH HIS INSTRUCTION. STARTING OF CLEARING AND GRUBBING OPERATIONS SHALL BE CONSTRUED TO MEAN THAT THE CONTRACTOR AGREES THAT THE EXISTING GRADES AND IMPROVEMENTS ARE ESSENTIALLY CORRECT AS SHOWN. THE CONTRACTOR SHALL NOT BE ENTITLED TO EXTRA PAYMENT IF EXISTING GRADES AND IMPROVEMENTS ARE IN ERROR AFTER HIS VERIFICATION THEREOF, OR IF HE FAILS TO REPORT THE DISCREPANCIES BEFORE PROCEEDING WITH ANY WORK WHETHER WITHIN AREA AFFECTED OR NOT.
10. THE CONTRACTOR SHALL REMOVE ALL VEGETATION BEFORE THE PLACING OF FILLS ON A NATURAL GROUND SURFACE.

ESTIMATED EARTHWORK QUANTITIES

TOTAL RAW CUT = 210,000 C.Y.
TOTAL RAW FILL = 156,000 C.Y.

TOTAL AREA TO BE GRADED = 1,672,620 SQ. FT. / 38.4 ACRES

NOTES:

1. THE QUANTITIES SHOWN ARE FOR GRADING PERMIT PURPOSES ONLY. THE CONTRACTOR SHALL BE RESPONSIBLE TO DETERMINE THE EXACT QUANTITIES FOR BIDDING PURPOSES.
2. NO ADJUSTMENT FACTOR IS APPLIED TO THE RAW CUT/FILL QUANTITIES.
3. EARTHWORK QUANTITIES SHOWN WERE TAKEN FROM EXISTING GROUND TO FINISH GRADE. QUANTITY DOES NOT REFLECT THE EXCAVATION OF PAVEMENT OR CONCRETE FOUNDATION.
4. CONTRACTOR/BIDDER SHALL NOT USE THE EARTHWORK QUANTITIES SHOWN ABOVE FOR BIDDING PURPOSES. REGARDLESS OF THE CUT AND FILL EARTHWORK QUANTITIES SHOWN ABOVE, THE CONTRACTOR IS RESPONSIBLE TO IMPORT OR EXPORT ALL NECESSARY MATERIALS TO COMPLETE THE GRADING WORK AT NO ADDITIONAL COST TO THE OWNER.

CONCRETE NOTES (FOR SITE CONCRETE AND RETAINING WALL ONLY)

1. ALL CONCRETE UNLESS OTHERWISE NOTED SHALL BE REGULAR WEIGHT HARD ROCK TYPE (150 LB/CU. FT.)
2. ALL PHASES OF WORK PERTAINING TO THE CONCRETE CONSTRUCTION SHALL CONFORM TO THE "BUILDING CODE REQUIREMENTS FOR REINFORCED CONCRETE" (ACI 318) WITH MODIFICATIONS AS NOTED IN THE DRAWINGS OR SPECIFICATIONS.
3. SCHEDULE OF CONCRETE 28-DAY STRENGTH AND TYPES:

LOCATION OF STRUCTURE	STRENGTH
RETAINING WALL AND FOUNDATION	3,000 PSI
SIDEWALK	2,500 PSI
ALL OTHER CONCRETE	2,500 PSI

4. PORTLAND CEMENT SHALL CONFORM TO ASTM C-150 TYPE II.
5. AGGREGATE FOR HARDROCK CONCRETE SHALL CONFORM TO ALL REQUIREMENTS AND TESTS OF ASTM C-33 AND PROJECT SPECIFICATIONS.
6. CONCRETE MIXES SHALL BE DESIGNED BY A QUALIFIED TESTING LABORATORY AND SHALL BE SUBMITTED TO THE ENGINEER FOR HIS REVIEW.
7. CONCRETE MIXING OPERATION, ETC. SHALL CONFORM TO ASTM C-94.
8. PLACEMENT OF CONCRETE SHALL CONFORM TO ACI STANDARD 301 AND PROJECT SPECIFICATIONS.
9. UNLESS OTHERWISE NOTED ON THE PLANS, MINIMUM CLEAR COVERAGE OF NEW CONCRETE OVER OUTER REINFORCING BARS SHALL BE AS FOLLOWS:

   A. CONCRETE POURED DIRECTLY AGAINST EARTH ——— 3" CLEAR TO REINFORCING

   B. WALL FACES:
   EXPOSED TO EARTH WITH FORMED SURFACES OR EXPOSED TO WEATHER ——— 1-1/2" CLEAR FOR #5 BARS AND SMALLER 2" CLEAR FOR #6 BARS AND LARGER
   INTERIOR FACES ——— 3/4" CLEAR

   C. BEAMS AND COLUMNS:
   NOT EXPOSED TO EARTH OR WEATHER ——— 1-1/2" CLEAR TO STIRRUPS AND TIES
   FORMED AND EXPOSED TO EARTH OR WEATHER ——— 1-1/2" CLEAR TO STIRRUPS AND TIES

   D. STRUCTURAL SLABS ——— 1" CLEAR AT TOP AND BOTTOM
10. ALL REINFORCING BARS, ANCHOR BOLTS AND OTHER CONCRETE INSERTS SHALL BE WELL SECURED IN POSITION PRIOR TO PLACING CONCRETE.
11. PROJECTING CORNERS OF BEAMS, WALLS, COLUMNS, EQUIPMENT PADS, ETC. SHALL BE FORMED WITH 3/4" CHAMFER, UNLESS OTHERWISE NOTED ON ARCHITECTURAL DRAWINGS.
12. PROVIDE SLEEVES FOR PLUMBING AND ELECTRICAL OPENINGS IN CONCRETE BEFORE PLACING. DO NOT CUT ANY REINFORCING WHICH MAY CONFLICT. CORING IN CONCRETE IS NOT PERMITTED EXCEPT AS SHOWN. NOTIFY THE ENGINEER IN ADVANCE OF CONDITIONS NOT SHOWN ON THE DRAWINGS.
13. CONDUIT OR PIPE SIZE (O.D.) THAT IS BURIED IN ANY CONCRETE SLABS SHALL NOT EXCEED 25 PERCENT OF SLAB THICKNESS AND SHALL BE PLACED BETWEEN THE TOP AND BOTTOM REINFORCING UNLESS SPECIFICALLY DETAILED OTHERWISE. CONCENTRATIONS OF CONDUITS OR PIPES SHALL BE AVOIDED EXCEPT WHERE DETAILED OPENINGS ARE PROVIDED.
14. THE CONCRETE SLAB THICKNESS SHALL BE MAINTAINED AS A MINIMUM UNLESS OTHERWISE SHOWN.
15. PROVIDE TWO-WEEK SCHEDULES SHOWING EXPECTED CONCRETE POUR LOCATIONS AND TIMES. NOTIFY ENGINEER AND SPECIAL INSPECTOR 48 HOURS PRIOR TO ANY CONCRETE POUR IF DIFFERENT THAN ON THE TWO-WEEK SCHEDULE.

CMU NOTES

1. ALL CONCRETE MASONRY UNITS (CMU) SHALL CONFORM TO ASTM C90, LATEST EDITION, WITH COMPRESSIVE STRENGTH OF 1,900 PSI.
2. MORTAR SHALL BE PROPORTIONED AS NECESSARY TO CONFORM TO THE REQUIREMENTS OF IBC TABLE 2103.8(1) (ASTM C270) FOR TYPE M OR S MORTAR.
3. GROUT SHALL CONFORM TO ASTM C476 AND HAVE A MINIMUM COMPRESSIVE STRENGTH OF 2,500 PSI AT 28 DAYS.
4. THE MINIMUM ULTIMATE COMPRESSIVE STRENGTH OF THE MASONRY WALL ASSEMBLAGE AT 28 DAYS (F'M) SHALL BE 1,500 PSI.
5. BEFORE BLOCK IS PLACED ON CONCRETE, THOROUGHLY CLEAN CONCRETE OF ALL LAITANCE AND ALL LOOSE MATERIAL. ROUGHEN AS IN A CONCRETE CONSTRUCTION JOINT.
6. PLACE ALL HORIZONTAL BARS IN BOND BEAM UNITS. WHEN TWO BARS ARE USED, STAGGER LAPS A MINIMUM OF 5'-0". VERTICAL REINFORCING SHALL BE HELD IN POSITION AT TOP AND BOTTOM AND AT INTERVALS NOT EXCEEDING 200 BAR DIAMETERS. TIE LAP SPLICE TO DOWEL BAR IF REBAR POSITIONER IS NOT USED NEAR THE DOWEL BAR.
7. ALL EMBEDDED ITEMS (BOLTS, ETC.) SHALL BE SECURED IN PLACE PRIOR TO GROUTING. PROVIDE A MINIMUM OF 1" GROUT AROUND ALL BOLTS IN MASONRY.
8. CLEAN ALL CELLS AND BOND BEAMS OF EXCESSIVE MORTAR PROTRUSIONS AND OTHER DEBRIS BEFORE GROUTING.
9. MAXIMUM GROUT POUR WITHOUT CLEANOUT IS 5'-0" IN BLOCK WALL. WHEN GROUT POUR IS MORE THAN 5'-0" HIGH, CLEANOUTS SHALL BE AT EVERY VERTICAL BAR BUT NOT MORE THAN 32" O.C. IF REQUIRED, CLEANOUTS SHALL NOT BE SEALED BEFORE INSPECTION. THE THICKNESS OF GROUT BETWEEN BLOCK AND REINFORCING STEEL SHALL NOT BE LESS THAN 1/2" AND BETWEEN PARALLEL BARS NOT LESS THAN 3/4".
10. ALL CELLS SHALL BE SOLIDLY FILLED WITH GROUT.
11. WHEN GROUTING IS STOPPED FOR A PERIOD OF ONE HOUR OR LONGER, FORM HORIZONTAL CONSTRUCTION JOINTS BY STOPPING THE GROUT POUR 1.5 INCHES MINIMUM BELOW THE UPPER MOST UNIT, EXCEPT AT TOP OF WALL.
12. WHEN SHOWN ON THE DRAWING, CONTROL JOINTS SHALL BE PLACED NOT LESS THAN 24" FROM A BEARING PLATE OR JAMB OF AN OPENING. PLACE BOND BEAM REINFORCING CONTINUOUS THROUGH EXPANSION AND CONTROL JOINTS, WRAPPING BARS WITH 1/8" THICK BOND BREAKING TAP 24" ON BOTH SIDES OF JOINT. DO NOT SPLICE BOND BEAM REINFORCING WITHIN 6'-0" OF AND EXPANSION OR CONTROL JOINT. LOCATION OF CONTROL JOINTS SHOULD BE COORDINATED WITH THE ENGINEER.
13. THE CONTRACTOR SHALL LOCATE THE CONSTRUCTION JOINTS SO AS NOT TO IMPAIR THE STRENGTH OF THE STRUCTURE AND TO MINIMIZE SHRINKAGE STRESSES.
14. WALLS SHALL BE CONSTRUCTED IN CONVENTIONAL RUNNING BOND, UNLESS OTHERWISE NOTED.

REINFORCING STEEL NOTES (FOR SITE CONCRETE AND RETAINING WALL ONLY)

1. ALL REINFORCING STEEL SHALL BE DETAILED AND PLACED IN CONFORMANCE WITH THE "BUILDING CODE REQUIREMENTS FOR REINFORCED CONCRETE" (ACI 318), THE CRSI "MANUAL OF STANDARD PRACTICE", AND THE "ACI DETAILING MANUAL – 1988" (SP-66) AS MODIFIED BY THE PROJECT DRAWINGS AND SPECIFICATIONS.
2. REINFORCING BARS SHALL CONFORM TO ASTM A-615 GRADE 60 REQUIREMENTS. #4 AND SMALLER BARS MAY BE GRADE 40.
3. ANCHOR BOLTS, DOWELS AND OTHER EMBEDDED ITEMS ARE TO BE SECURELY TIED IN PLACE BEFORE CONCRETE IS POURED.
4. ALL REINFORCING BAR BENDS SHALL BE MADE COLD.
5. REINFORCING SPLICES SHALL BE MADE ONLY WHERE INDICATED ON THE DRAWINGS.
6. DOWELS BETWEEN FOOTING AND WALL OR COLUMNS SHALL BE THE SAME GRADE, SIZE, SPACING, AND NUMBER AS THE VERTICAL REINFORCING RESPECTIVELY, UNLESS OTHERWISE NOTED.
7. WELDING OF REINFORCING STEEL IS NOT PERMITTED UNLESS OTHERWISE SHOWN ON THE DRAWINGS.
8. CONTRACTOR SHALL SUBMIT REINFORCING BAR LAYOUTS AND DETAILS FOR THE ENGINEER'S REVIEW PRIOR TO FABRICATION. FABRICATE FROM REVIEWED DRAWINGS ONLY.
9. REINFORCING BARS SHALL BE AS LONG AS PRACTICABLE AND AS DETAILED AND SHALL BE LAPPED AT SPLICES AND CORNERS NOT LESS THAN 32 BAR DIAMETER (24" MINIMUM), UNLESS OTHERWISE SHOWN. STAGGER HORIZONTAL WALL BAR SPLICES. IN GENERAL, BAR SPLICES SHALL BE MADE AT POINTS OF MINIMUM STRESS. IN BEAMS AND SLABS, SPLICE TOP BARS AT MID-SPAN, BOTTOM BARS OVER SUPPORTS, UNLESS OTHERWISE SHOWN.
10. EMBEDDED METAL COMPONENTS MADE UP OF ALLOYS THAT ARE DISSIMILAR TO THAT OF THE REINFORCING STEEL SHALL NOT BE ATTACHED DIRECTLY TO REINFORCING. MEASURES SHALL BE TAKEN TO ELECTRICALLY ISOLATE SAID COMPONENTS FROM ANY REINFORCING TO PREVENT CATHODIC EFFECTS.

SEPTIC SYSTEM NOTES

1. OWNER / CONTRACTOR REVISIONS TO THE SEPTIC SYSTEM DESIGN INCLUDING CHANGE OF LOCATION AND/OR SUBSTITUTION OF MATERIALS AFTER OUR SUBMITTAL TO THE DEPARTMENT OF HEALTH MAY REQUIRE AN ADDITIONAL FEE FOR REVISIONS AND RESUBMITTAL TO OBTAIN D.O.H. APPROVAL.
2. SEPTIC SYSTEM DESIGN IS BASED ON CURRENT TOPOGRAPHIC FEATURES ALLOWING FOR MINOR LOT CLEARING. IF LOT REGRADING IS DONE, THE FUNCTION OF THE SYSTEM MAY BE AFFECTED; THEREFORE THE DESIGN SHOULD BE REVIEWED BY THE ENGINEER BEFORE CONSTRUCTION.
3. THE DEPTHS TO THE PIPE INVERTS OF THE SEPTIC TANK, DISTRIBUTION BOX, AND ABSORPTION SYSTEM ARE CONTROLLED BY TOPOGRAPHIC FEATURES AND THE INVERT OF THE BUILDING SEWER, WHICH MAY IMPACT THE DEPTHS SHOWN ON THE DRAWINGS.
4. SEPTIC TANK AND ABSORPTION BED ARE TO BE PLACED NOT LESS THAN 5' FROM ANY STRUCTURE OR PROPERTY LINE NOR LESS THAN 10' FROM ANY TREE HAVING A TRUNK DIAMETER OF 4" OR GREATER.
5. ABSORPTION PIT TO BE PLACED NOT LESS THAN 5' FROM ANY STRUCTURE, 9' FROM ANY PROPERTY LINE, NOR LESS THAN 10' FROM ANY TREE HAVING A TRUNK DIAMETER OF 4" OR GREATER.
6. SEPTIC SYSTEM SHALL BE LOCATED NOT LESS THAN 1,000' FROM ANY POTABLE WATER SOURCE SERVING A PUBLIC WATER SYSTEM.
7. WASTEWATER DISPOSAL SYSTEM SHALL BE LOCATED ON THE PROPERTY TO MAXIMIZE THE VERTICAL SEPARATION DISTANCE FROM THE BOTTOM OF THE LEACH LINES OR SEEPAGE PIT TO THE SEASONAL HIGH GROUNDAWATER LEVEL, BEDROCK, HIGH TIDE, OR OTHER LIMITING LAYER, BUT UNDER NO CIRCUMSTANCES SHALL THIS VERTICAL SEPARATION BE LESS THAN 3 FEET. WHERE WATER-BEARING FORMATIONS ARE IN DANGER OF CONTAMINATION, GREATER VERTICAL SEPARATION MAY BE REQUIRED.
8. LEACHING SYSTEM CANNOT BE LOCATED NEAR THE TOP EDGE OF A FILL, RIPPED, OR NATURAL SLOPE WHERE HORIZONTAL TRAVEL OF LEACHATE COULD SURFACE. NOTIFY ENGINEER IMMEDIATELY TO RELOCATE THE SYSTEM.
9. PLUMBING FROM HOUSE TO TANK AND FROM TANK TO DISTRIBUTION BOX MUST HAVE A MINIMUM SLOPE OF ¼" PER FOOT. IF THE SLOPE BETWEEN THE TANK AND THE DISTRIBUTION BOX EXCEEDS 2" PER FOOT, CONTACT THE ENGINEER BEFORE CONSTRUCTION.
10. LEACH CHAMBERS IN THE ABSORPTION SYSTEM SHALL BE LAID ON A FLAT GRADE HAVING NO SLOPE.
11. THE DISTRIBUTION BOX SHALL BE SET LEVEL AND ARRANGED SO THAT EFFLUENT IS EVENLY DISTRIBUTED TO EACH DISTRIBUTION LINE.

Engineering Partners, Inc.
Progressive Solutions
455 ELANIKAULA STREET
HILO, HAWAII, 96720
www.epintegrated.com

LEN WEN FANG
LICENSED PROFESSIONAL ENGINEER
No. 9361-C
Exp. 04/30/16
HAWAII, U.S.A.

SIGNATURE

MARK	DATE	DESCRIPTION
1	4/10/14	NOTES ADDED TO GRADING NOTES

REVIEWED:
DEPARTMENT OF PARKS AND RECREATION — DATE

COUNTY OF HAWAII
DEPARTMENT OF PARKS & RECREATION
101 PAUAHI STREET SUITE 6 / HILO, HAWAII 96720 / PHONE: 808.961.8311 / FAX: 808.961.8411

PAHOA PARK MASTER PLAN
PHASE I - BID SUBMITTAL 2014-02-10

JOB NO.: PR-4234 — PAHOA, PUNA, HAWAII — TMK: (3) 1-5-002:020

PLAN SHEET DESCRIPTION: CIVIL NOTES

DESIGNED BY: OH
DRAWN BY: OH
CHECKED BY: YMF

SHEET NO. C-001 OF SHEETS

DATE: 2014-02-10

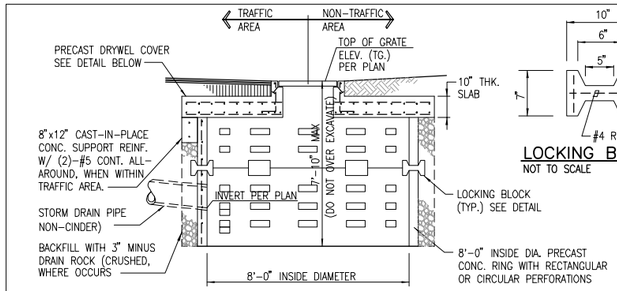

DRYWELL (BEARING CURB SECTION)
NOT TO SCALE

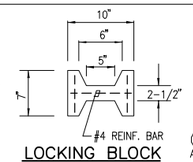

LOCKING BLOCK
NOT TO SCALE

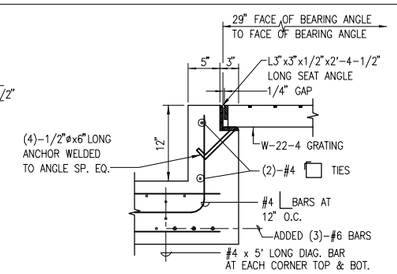

SECTION AT BEARING CURB

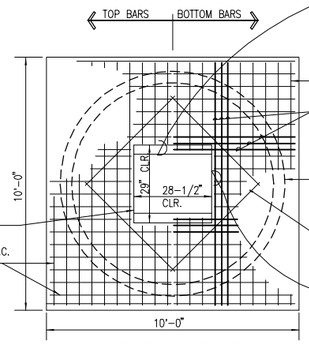

DRYWELL COVER
NOT TO SCALE

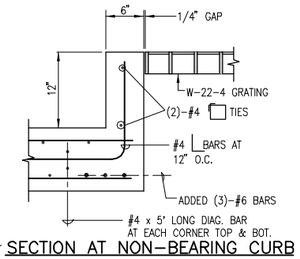

SECTION AT NON-BEARING CURB

NOTES:
1. MINIMUM CONCRETE COMPRESSIVE STRENGTH, f'c, SHALL BE 3000 PSI
2. MINIMUM REINFORCING STEEL YIELD STRENGTH, Fy, SHALL BE 60 KSI
3. FLAT BARS, RODS, AND ANGLE STEEL FOR GRATING AND SEAT SHALL BE ASTM A36, GRADE 36.
4. GRATING SHALL BE WELDED AND HOT DIP GALVANIZED AFTER FABRICATION.
5. SEAT ANGLE SHALL BE WELDED AND HOT DIP GALVANIZED AFTER FABRICATION.
6. ALL EXPOSED CONCRETE EDGES SHALL RECEIVE 3/4" RADIUS ROUND.

6 MODIFIED DRYWELL W/CURBING AND W-22-4 GRATING
NOT TO SCALE

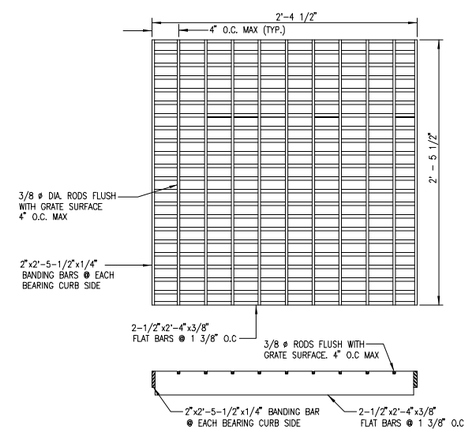

W-22-4 GRATE

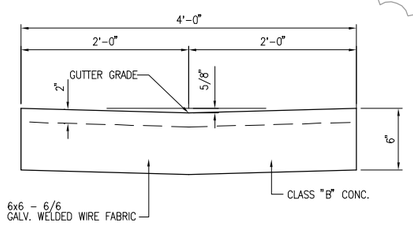

NOTES:
1. CONSTRUCTION JOINTS SHALL BE KEYED CONSTRUCTION JOINTS WITH TIE BARS

7 THRU GUTTER DETAIL
NOT TO SCALE

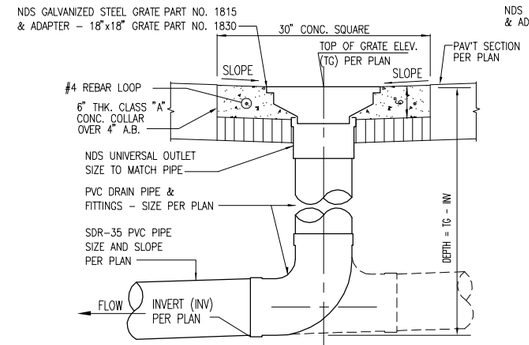

3 TRAFFIC RATED YARD DRAIN w/GRATE DETAIL
NOT TO SCALE

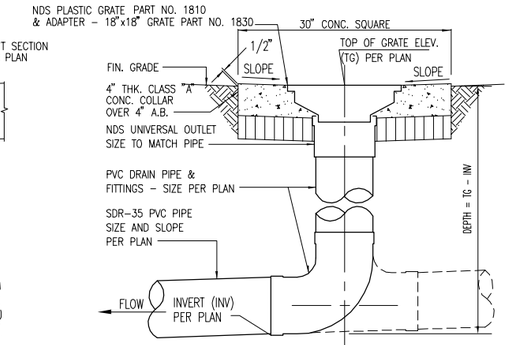

1 GRATED YARD DRAIN DETAIL
NOT TO SCALE

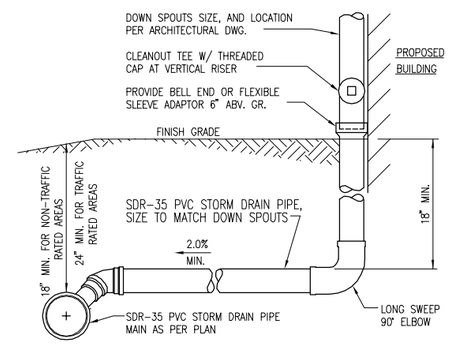

4 DOWNSPOUT DETAIL
NOT TO SCALE

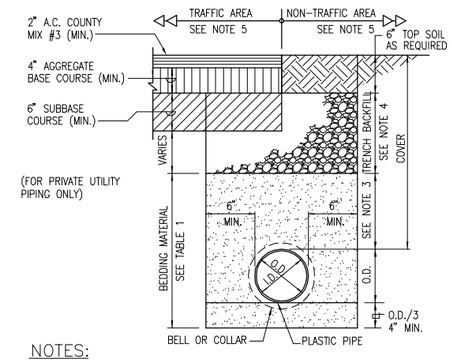

NOTES:
1. THIS TRENCH SECTION APPLIES TO FLEXIBLE PIPES INCLUDING SEWER, STORM DRAIN. FLEXIBLE PIPE MATERIAL INCLUDES CMP, PVC, ABS, AND HDPE.
2. THIS TRENCH SECTION APPLIES TO PIPING WITHIN PRIVATE PROPERTIES ONLY.
3. BEDDING MATERIAL ABOVE PIPE SHALL BE 12" HIGH FOR GRANULAR MATERIAL AND 6" HIGH FOR CONCRETE. GRANULAR BEDDING MATERIAL SHALL BE COMPACTED TO 95% COMPACTION.
4. TRENCH BACKFILL SHALL BE 3" MINUS GRANULAR BACKFILL OR SUITABLE NATIVE MATERIAL NO LARGER THAN 6". TRENCH BACKFILL SHALL BE COMPACTED TO 95% COMPACTION.
5. TRAFFIC AREA SHALL INCLUDE BUT NOT LIMITED TO PAVED OR UNPAVED ROADWAY, SHOULDER, DRIVEWAY, CART PATH, PARKING, LOADING ZONE, STORAGE AREA AND AREAS NOT PROTECTED FROM TRAFFIC LOAD.
NON-TRAFFIC AREA SHALL BE PROTECTED FROM TRAFFIC LOAD BY MEANS OF CONCRETE CURBS, GUARDRAILS, BARRICADE, AND AREAS INACCESSIBLE BY VEHICLES.

TABLE 1: BEDDING MATERIAL

DEPTH OF COVER IN FT.	TRAFFIC AREA	NON-TRAFFIC AREA
6" < COVER < 12"	NOT ALLOWED	ALLOWED FOR 6"ø PIPE OR SMALLER ONLY WITH NO. 10 CRUSHED ROCK
12" < COVER < 18"	ALLOWED FOR 6"ø PIPE OR SMALLER ONLY WITH CLASS "C" CONCRETE	NO. 10 CRUSHED ROCK (#4 SAND)
18" < COVER < 24"	CLASS "C" CONCRETE	NO. 10 OR NO. 67 CRUSHED ROCK
COVER > 24"	NO. 10 OR NO. 67 CRUSHED ROCK	NO. 10 OR NO. 67 CRUSHED ROCK

2 FLEXIBLE PIPE TRENCH SECTION
NOT TO SCALE

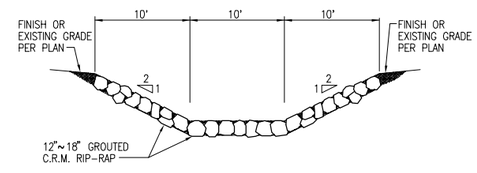

NOTES:
1. RIP-RAP MATERIAL MAY BE OMITTED WHERE SOLID BEDROCK IS ENCOUNTERED

5 GROUTED C.R.M. RIP-RAP
NOT TO SCALE

Engineering Partners, Inc.
Progressive Solutions
455 ELANIKAULA STREET
HILO, HAWAII, 96720
www.epintegrated.com

YIN WEN FANG
LICENSED PROFESSIONAL ENGINEER
Exp. 04/30/16
No. 9361-C
HAWAII, U.S.A.

SIGNATURE

MARK	DATE	DESCRIPTION
1	4/10/14	SIDEWALK CULVERT EDITED, SWALE REMOVED & THRU GUTTER ADDED

REVIEWED: DEPARTMENT OF PARKS AND RECREATION DATE

OH
COUNTY OF HAWAI'I
DEPARTMENT OF PARKS & RECREATION
101 PAUAHI STREET, SUITE 6 | HILO, HAWAII 96720 | PHONE: 808.961.8311 | FAX: 808.961.8411

PAHOA PARK MASTER PLAN
PHASE I - BID SUBMITTAL 2014-02-10

JOB NO.: PR-4234 PAHOA, PUNA, HAWAII TMK: (3) 1-5-002:020

DESIGNED BY: OH
DRAWN BY: OH
CHECKED BY: YWF
DATE: 2014-02-10

SHEET NO. C-003 OF SHEETS

PLAN SHEET DESCRIPTION: CIVIL DETAILS

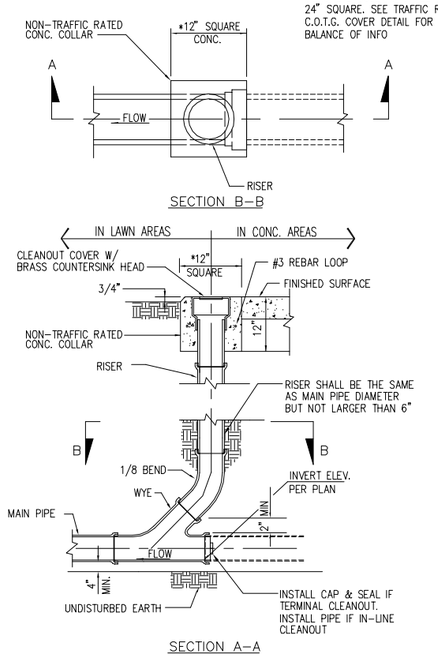

7 CLEAN-OUT-TO-GRADE
NOT TO SCALE

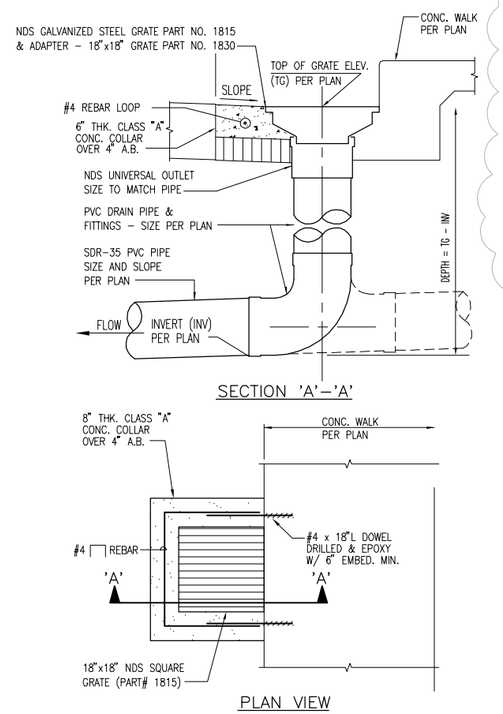

5 TRAFFIC RATED GRATED YARD DRAIN DETAIL
NOT TO SCALE

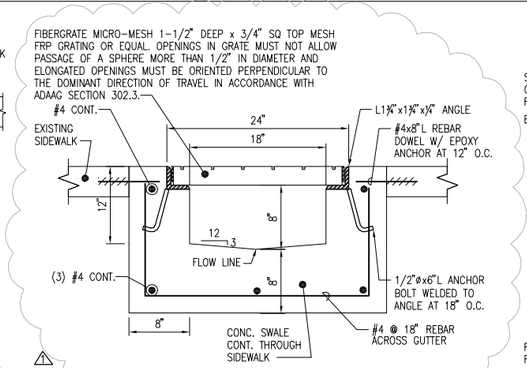

3 SIDEWALK CULVERT DETAIL
NOT TO SCALE

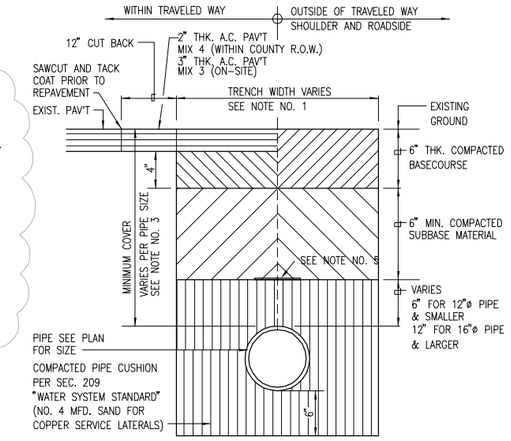

NOTES:

1. SEE TABLE 300-1, PAGE 302-3, WATER SYSTEM STANDARDS AS AMENDED 2002.
2. LOCAL MATERIAL MAY BE USED OUTSIDE SHOULDER AREA.
3. SEE TABLE 100-3, PAGE 102-4, WATER SYSTEM STANDARDS.
4. DRIVEWAY RESTORATION
   A. WHERE EXISTING DRIVEWAY IS CONCRETE, 4" THK. CONCRETE REINFORCED WITH 6x6 10/10 WWM ON 4" THK. BASECOURSE SHALL BE USED IN LIEU OF THE ABOVE SECTION.
   B. WHERE AN EXISTING DRIVEWAY IS UNPAVED, THE DRIVEWAY SHALL BE RESTORED TO A CONDITION EQUAL OR BETTER THAN THE EXISTING DRIVEWAY.
   C. WHERE EXISTING DRIVEWAY IS PAVED, THE DRIVEWAY SHALL BE RESTORED AS SHOWN ABOVE.
   D. CONTRACTOR SHALL NOTIFY THE OWNER OF THE DRIVEWAY 48 HOURS BEFORE COMMENCEMENT OF ANY WORK.
5. ALL NEWLY INSTALLED WATERLINES SHALL HAVE A 4 MIL THICK, 6-INCH WIDE, NON METALLIC BLUE WARNING TAPE OVER CENTERLINE OF PIPE LABELED "CAUTION WATERLINE BURIED BELOW"

1 TYP. TRENCH AND PAV'T REPAIR SECTION
NOT TO SCALE

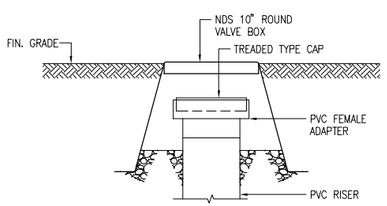

8 ALTERNATE NON-TRAFFIC RATED CLEAN-OUT-TO-GRADE
NOT TO SCALE

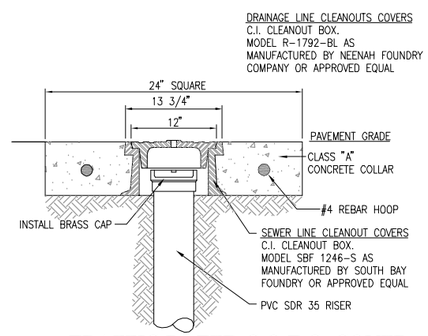

6 TRAFFIC RATED C.O.T.G. COVER
NOT TO SCALE

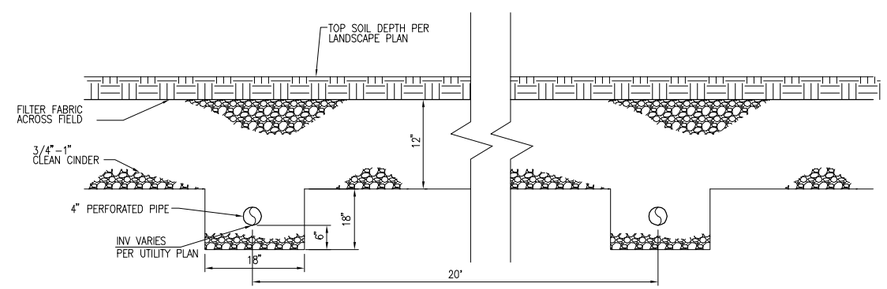

2 BASEBALL/MULTI-USE FIELD DRAINAGE
NOT TO SCALE

Engineering Partners, Inc.
Progressive Solutions
455 ELANIKAULA STREET
HILO, HAWAII, 96720
www.epintegrated.com

YEN WEN FANG LICENSED PROFESSIONAL ENGINEER Exp. 04/30/16 No. 9361-C HAWAII, U.S.A.

SIGNATURE

MARK	DATE	DESCRIPTION
1	4/10/14	SIDEWALK CULVERT EDITED & SWALE REMOVED

REVIEWED:
DEPARTMENT OF PARKS AND RECREATION — DATE

COUNTY OF HAWAII
DEPARTMENT OF PARKS & RECREATION
101 PAUAHI STREET, SUITE 6 / HILO, HAWAII 96720 / PHONE: 808.961.8311 / FAX: 808.961.8411

PAHOA PARK MASTER PLAN
PHASE I - BID SUBMITTAL 2014-02-10

JOB NO.: PR-4234 — PAHOA, PUNA, HAWAII — TMK: (3) 1-5-002:020

PLAN SHEET DESCRIPTION: CIVIL DETAILS

DESIGNED BY: OH
DRAWN BY: OH
CHECKED BY: YWF

SHEET NO. C-004 OF SHEETS

DATE: 2014-02-10

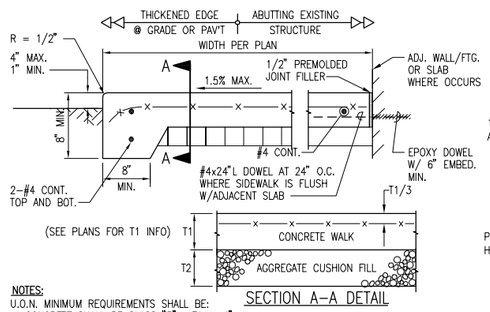

NOTES:
U.O.N. MINIMUM REQUIREMENTS SHALL BE:
1. CONCRETE SHALL BE CLASS "B". T1=> 4".
2. AGGREGATE CUSHION FILL SHALL BE ASTM C33 NO. 67. T2=> 4".
3. REINFORCING SHALL BE GALVANIZED 6"x6" 10/10 (6"x6" W1.4xW1.4) WWM.

3 TYP. CONC. WALK DETAIL
NOT TO SCALE

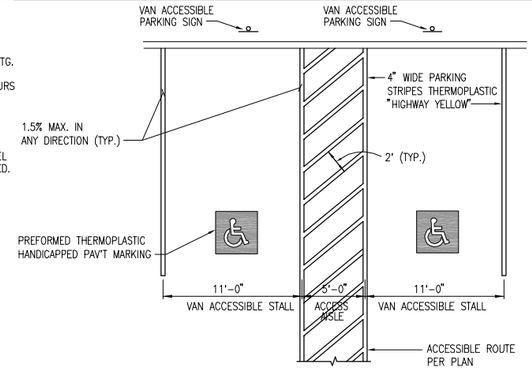

2 ADA PARKING LAYOUT A
NOT TO SCALE

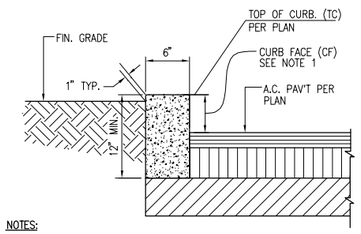

NOTES:
1. U.O.N. CURB FACE SHALL BE 6" HIGH.
2. SAWCUT EXPANSION JOINT IN CURB AT 10' O.C. AND AT B.C.R., E.C.R AND M.O.C.
3. WHEN CURB FACE IS HIGHER THAN 6", TOTAL HEIGHT SHALL BE CF x 2.
4. SEE A.C. PAV'T AND CONC. WALK DETAILS FOR BALACE OF INFO.

4 PLANTER CURB DETAIL
NOT TO SCALE

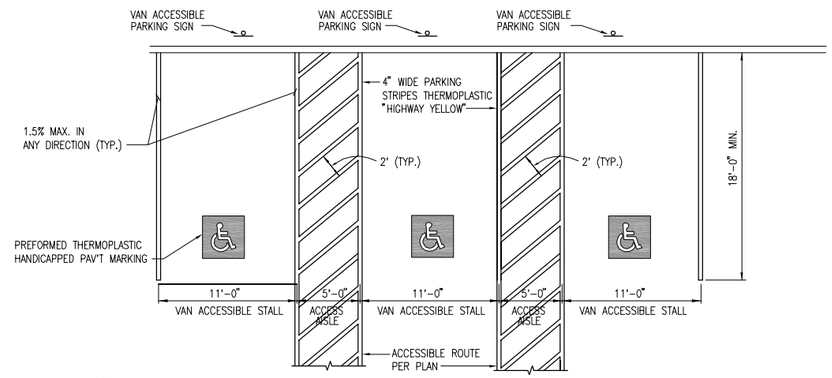

2 ADA PARKING LAYOUT B
NOT TO SCALE

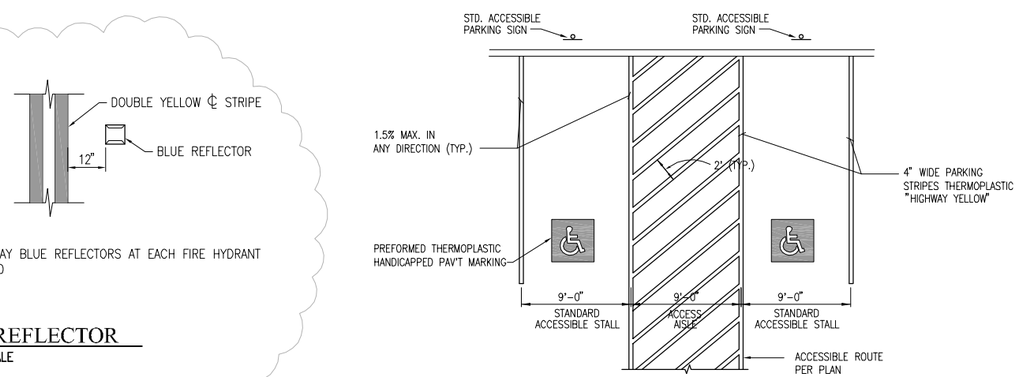

2 ADA PARKING LAYOUT C
NOT TO SCALE

NOTE:
INSTALL 2-WAY BLUE REFLECTORS AT EACH FIRE HYDRANT (2) REQUIRED

5 BLUE REFLECTOR
NOT TO SCALE

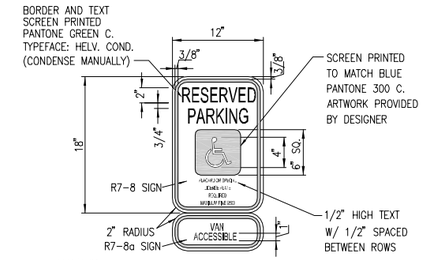

NOTES:
1. SIGNS SHALL BE ALUM. T6061 SHEET COVERED WITH ENGINEERING GRADE REFLECTIVE SHEETING.
2. SIGN LETTERING SHALL BE UPPERCASE SETTERS OF THE TYPE APPROVED BY THE FEDERAL HIGHWAY ADMINISTRATION.

TYPICAL RESERVED PARKING SIGN FOR VAN ACCESSIBLE STALL

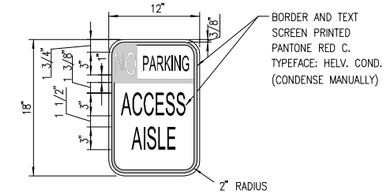

NOTES:
1. SIGNS SHALL BE ALUM. T6061 SHEET COVERED WITH ENGINEERING GRADE REFLECTIVE SHEETING.
2. SIGN LETTERING SHALL BE UPPERCASE SETTERS OF THE TYPE APPROVED BY THE FEDERAL HIGHWAY ADMINISTRATION.

TYPICAL ACCESS AISLE SIGN

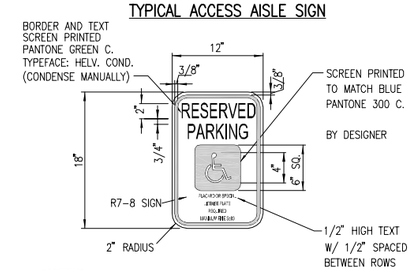

NOTES:
1. SIGNS SHALL BE ALUM. T6061 SHEET COVERED WITH ENGINEERING GRADE REFLECTIVE SHEETING.
2. SIGN LETTERING SHALL BE UPPERCASE SETTERS OF THE TYPE APPROVED BY THE FEDERAL HIGHWAY ADMINISTRATION.

TYPICAL RESERVED PARKING SIGN FOR DISABLED PERSONS

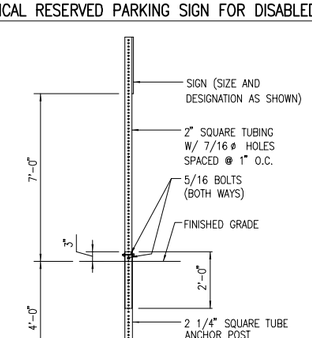

SIGN POST DETAIL

1 ACCESS PARKING SIGN AND POST DETAIL
NOT TO SCALE

Engineering Partners, Inc.
Progressive Solutions
455 ELANIKAULA STREET
HILO, HAWAII, 96720
www.epintegrated.com

KEN WEN FANG LICENSED PROFESSIONAL ENGINEER Exp. 04/30/16 No. 9361-C HAWAII, U.S.A.

MARK	DATE	DESCRIPTION
1	4/10/14	CURB DETAIL REPLACED W/ BLUE REFLECTOR

SIGNATURE

REVIEWED: DATE

DEPARTMENT OF PARKS AND RECREATION

COUNTY OF HAWAII
DEPARTMENT OF PARKS & RECREATION
101 PAUAHI STREET, SUITE 6 / HILO, HAWAII 96720 / PHONE: 808.961.8311 / FAX: 808.961.8411

PAHOA PARK MASTER PLAN
PHASE I - BID SUBMITTAL 2014-02-10

JOB NO.: PR-4234 PAHOA, PUNA, HAWAII TMK: (3) 1-5-002:020

PLAN SHEET DESCRIPTION: CIVIL DETAILS

DESIGNED BY: OH
DRAWN BY: OH
CHECKED BY: YWF

SHEET NO. C-007 OF SHEETS

DATE: 2014-02-10

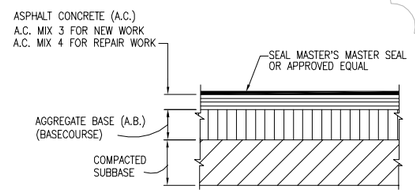

10 AC. PAV'T RESEALANT SECTION
NOT TO SCALE

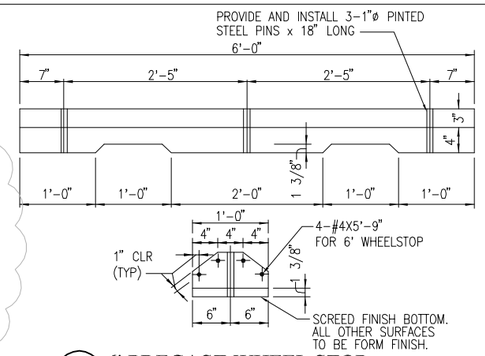

7 6' PRECAST WHEEL STOP
SCALE: NOT TO SCALE

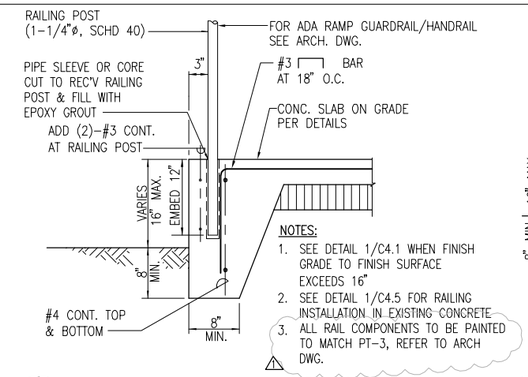

NOTES:
1. SEE DETAIL 1/C4.1 WHEN FINISH GRADE TO FINISH SURFACE EXCEEDS 16"
2. SEE DETAIL 1/C4.5 FOR RAILING INSTALLATION IN EXISTING CONCRETE
3. ALL RAIL COMPONENTS TO BE PAINTED TO MATCH PT-3, REFER TO ARCH DWG.

4 RAILING POST EMBEDMENT
NOT TO SCALE

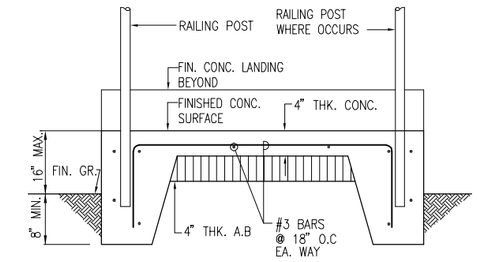

NOTES:
1. ALL RAIL COMPONENTS TO BE PAINTED TO MATCH PT-3, REFER TO ARCH DWG.

1 TYPICAL ADA RAMP DETAIL
NOT TO SCALE

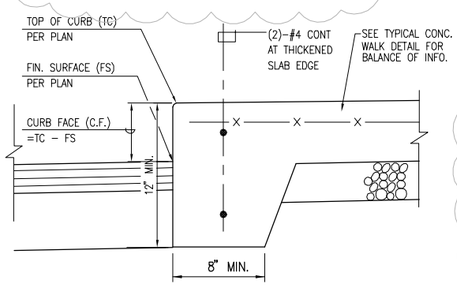

11 MONOLITHIC CONC. CURB & SIDEWALK TO A.C. PAV'T DET.
NOT TO SCALE

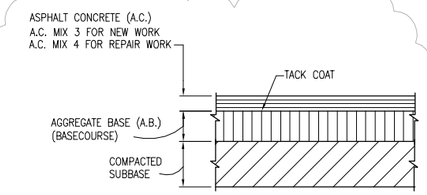

THICKNESSES OF A.C., A.B., AND SUBGRADE PER PLAN

U.O.N. MINIMUM PAVEMENT SECTION SHALL BE 2"A.C./4"A.B. ON 95% COMPACTED SUBGRADE.

FOR WORK WITHIN COUNTY R.O.W., SUBBASE SHALL BE 6" THICK MINIMUM OR AS SPECIFIED BY THE ENGINEER

8 TYP. AC. PAV'T SECTION
NOT TO SCALE

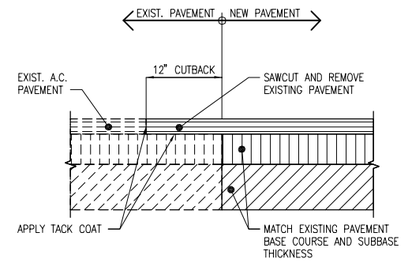

5 NEW TO EXIST. PAV'T DETAIL
NOT TO SCALE

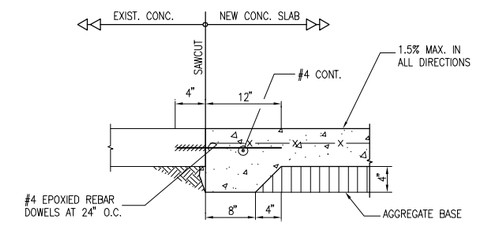

NOTES:
U.O.N. MINIMUM REQUIREMENTS SHALL BE:
1. CONCRETE SHALL BE CLASS "A". T1=> 4".
2. AGGREGATE CUSHION FILL SHALL BE ASTM C33 NO. 67. T2=> 4".
3. REINFORCING SHALL BE GALVANIZED 6"x6" 10/10 (6"x6" W1.4xW1.4) WWM.

2 NEW CONCRETE TO EXISTING CONCRETE
NOT TO SCALE

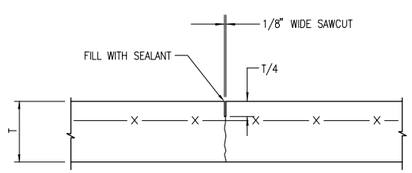

NOTE:
U.O.N. CRACK CONTROL JOINTS (CCJ) SHALL BE SPACED TO CREATE SQUARE PATTERN, I.E. 5' WIDE SIDEWALK SHALL BE SAWCUT AT 5' O.C.

12 CRACK CONTROL JOINT (CCJ)
NOT TO SCALE

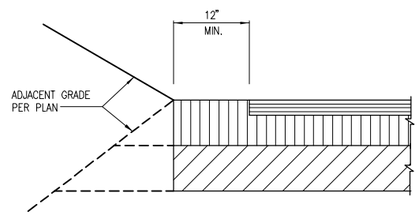

9 EDGE OF PAV'T DETAIL
NOT TO SCALE

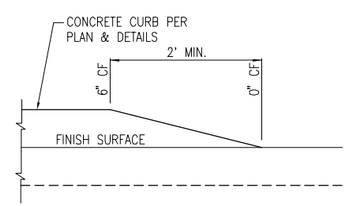

6 CONCRETE CURB TERMINATION
NOT TO SCALE

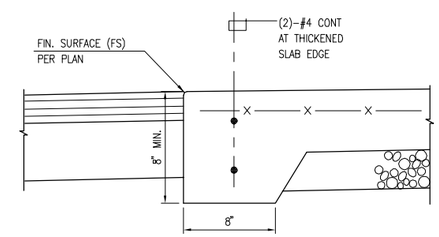

3 FLUSH CONCRETE TO A.C. PAVEMENT DETAIL
NOT TO SCALE

Engineering Partners, Inc.
Progressive Solutions
455 ELANIKAULA STREET
HILO, HAWAII, 96720
www.epintegrated.com

YIN WEN FANG
LICENSED PROFESSIONAL ENGINEER
Exp. 04/30/16
No. 9361-C
HAWAII, U.S.A.

SIGNATURE

MARK	DATE	DESCRIPTION
1	4/10/14	MULTIPLE CHANGES TO SHEET

REVIEWED: DATE
DEPARTMENT OF PARKS AND RECREATION

COUNTY OF HAWAII
DEPARTMENT OF PARKS & RECREATION
101 PAUAHI STREET, SUITE 6 / HILO, HAWAII 96720 PHONE: 808.961.8311 / FAX: 808.961.8411

PAHOA PARK MASTER PLAN
PHASE I - BID SUBMITTAL 2014-02-10

JOB NO.: PR-4234
PAHOA, PUNA, HAWAII
TMK: (3) 1-5-002:020

PLAN SHEET DESCRIPTION: CIVIL DETAILS

DESIGNED BY: OH
DRAWN BY: OH
CHECKED BY: YWF

SHEET NO. C-008
OF SHEETS

DATE: 2014-02-10

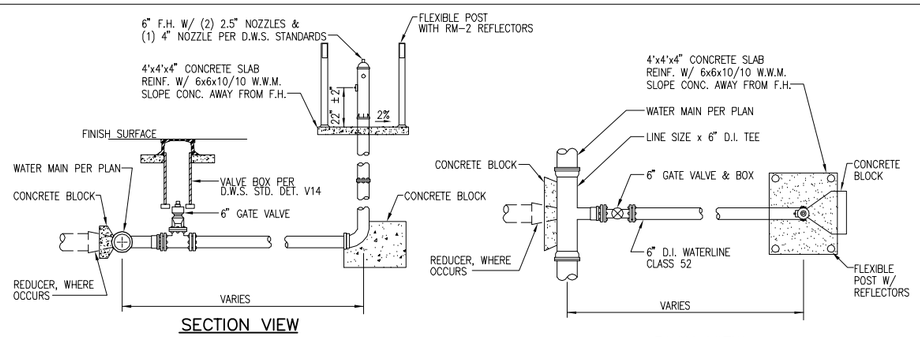

6 FIRE HYDRANT DETAIL

NOT TO SCALE

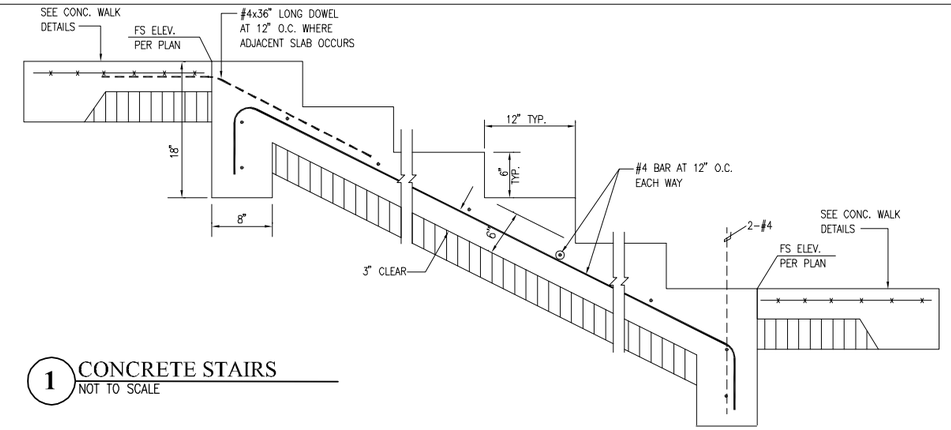

1 CONCRETE STAIRS

NOT TO SCALE

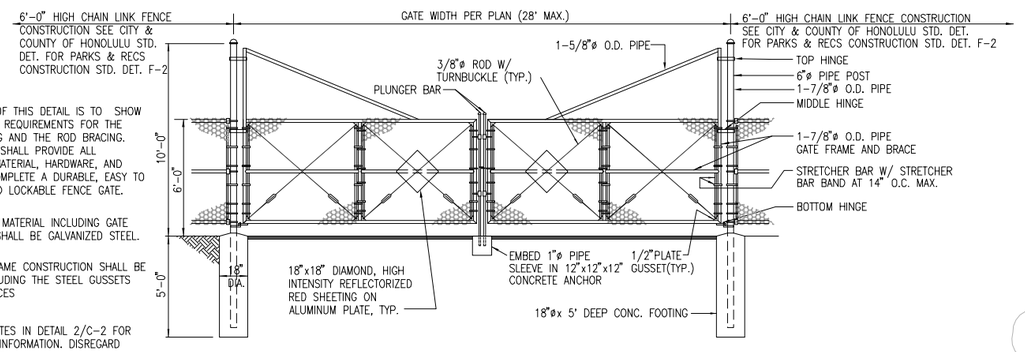

NOTES

1. THE INTENT OF THIS DETAIL IS TO SHOW THE MINIMUM REQUIREMENTS FOR THE POST FOOTING AND THE ROD BRACING. CONTRACTOR SHALL PROVIDE ALL NECESSARY MATERIAL, HARDWARE, AND LABOR TO COMPLETE A DURABLE, EASY TO OPERATE, AND LOCKABLE FENCE GATE.
2. ALL FENCING MATERIAL INCLUDING GATE HARDWARES SHALL BE GALVANIZED STEEL.
3. THE GATE FRAME CONSTRUCTION SHALL BE WELDED INCLUDING THE STEEL GUSSETS AND EYE PIECES
4. SEE GATE NOTES IN DETAIL 2/C-2 FOR BALANCE OF INFORMATION. DISREGARD GATE NOTE #3

7 HEAVY DUTY DOUBLE SWING CHAIN LINK FENCE

NOT TO SCALE

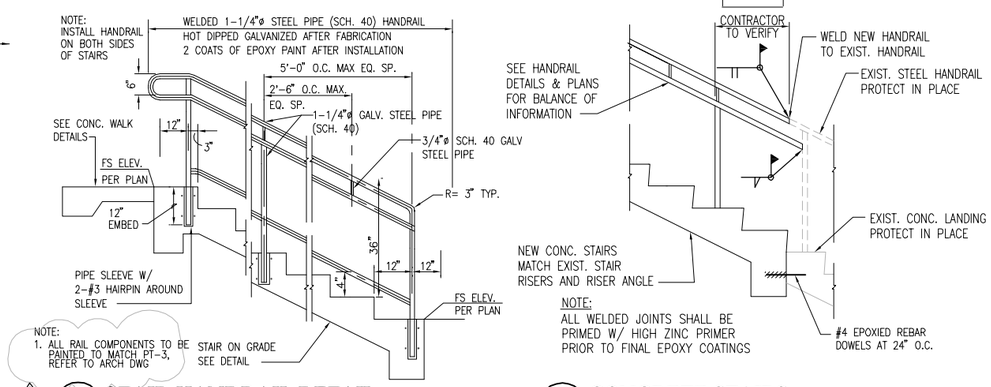

4 STAIR HANDRAIL DETAIL

NOT TO SCALE

2 CONCRETE STAIRS

NOT TO SCALE

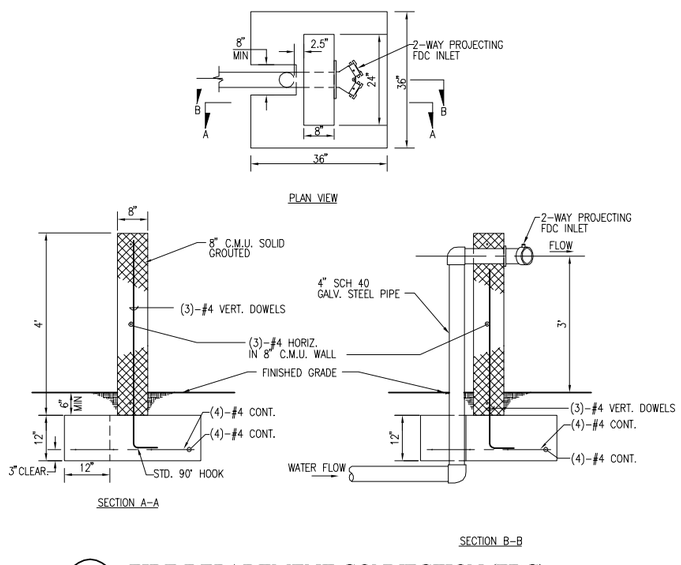

8 FIRE DEPARTMENT CONNECTION (FDC)

NOT TO SCALE

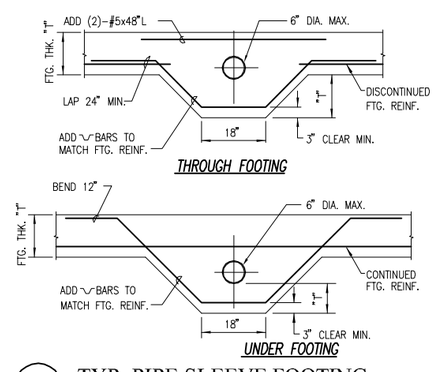

5 TYP. PIPE SLEEVE FOOTING

NOT TO SCALE

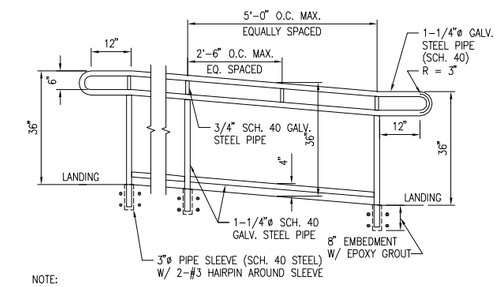

NOTE:
1. U.O.N. INSTALL ON BOTH SIDES OF STAIRS OR RAMP
2. ASSEMBLY SHALL BE HOT DIP GALVANIZED AFTER FABRICATION AND PAINTED WITH TWO (2) COATS OF EPOXY PAINT AFTER INSTALLATION
3. ALL RAIL COMPONENTS TO BE PAINTED TO MATCH PT-3, REFER TO ARCH DWG.

3 HANDRAIL

SCALE: NOT TO SCALE

Engineering Partners, Inc.
Progressive Solutions
455 ELANIKAULA STREET
HILO, HAWAII, 96720
www.epintegrated.com

KEN WEN FANG
LICENSED PROFESSIONAL ENGINEER
Exp. 04/30/16
No. 9361-C
HAWAII, U.S.A.

SIGNATURE

MARK	DATE	DESCRIPTION
1	4/10/14	RAIL PAINTING NOTES ADDED

REVIEWED: DATE

DEPARTMENT OF PARKS AND RECREATION

COUNTY OF HAWAI'I
DEPARTMENT OF PARKS & RECREATION
101 PAUAHI STREET SUITE 6 | HILO, HAWAII 96720 | PHONE: 808.961.8311 | FAX: 808.961.8411

PAHOA PARK MASTER PLAN
PHASE I - BID SUBMITTAL 2014-02-10

JOB NO.: PR-4234 — PAHOA, PUNA, HAWAII — TMK: (3) 1-5-002:020

PLAN SHEET DESCRIPTION: CIVIL DETAILS

DESIGNED BY: CH
DRAWN BY: CH
CHECKED BY: YWF

SHEET NO. C-009 OF SHEETS

DATE: 2014-02-10

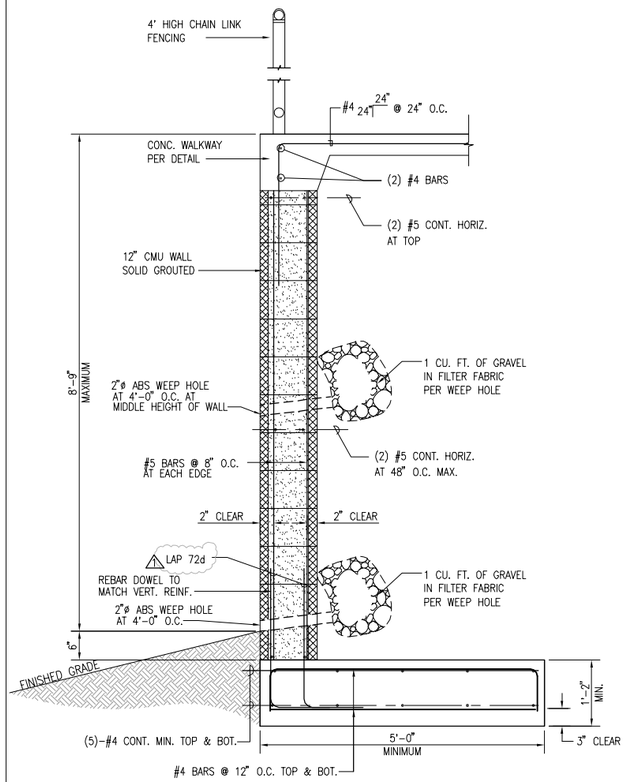

3 12" THICK CMU RETAINING WALL (TYPE 2)
NOT TO SCALE

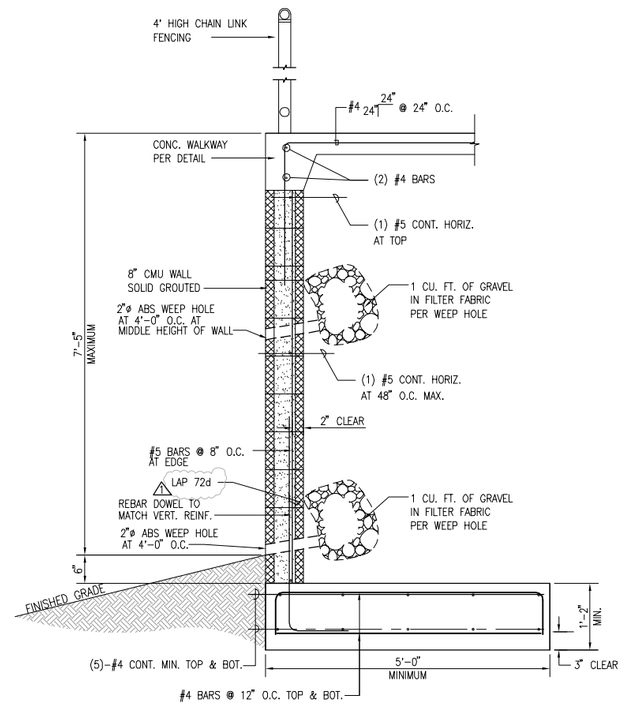

2 8" THICK CMU RETAINING WALL (TYPE 1)
NOT TO SCALE

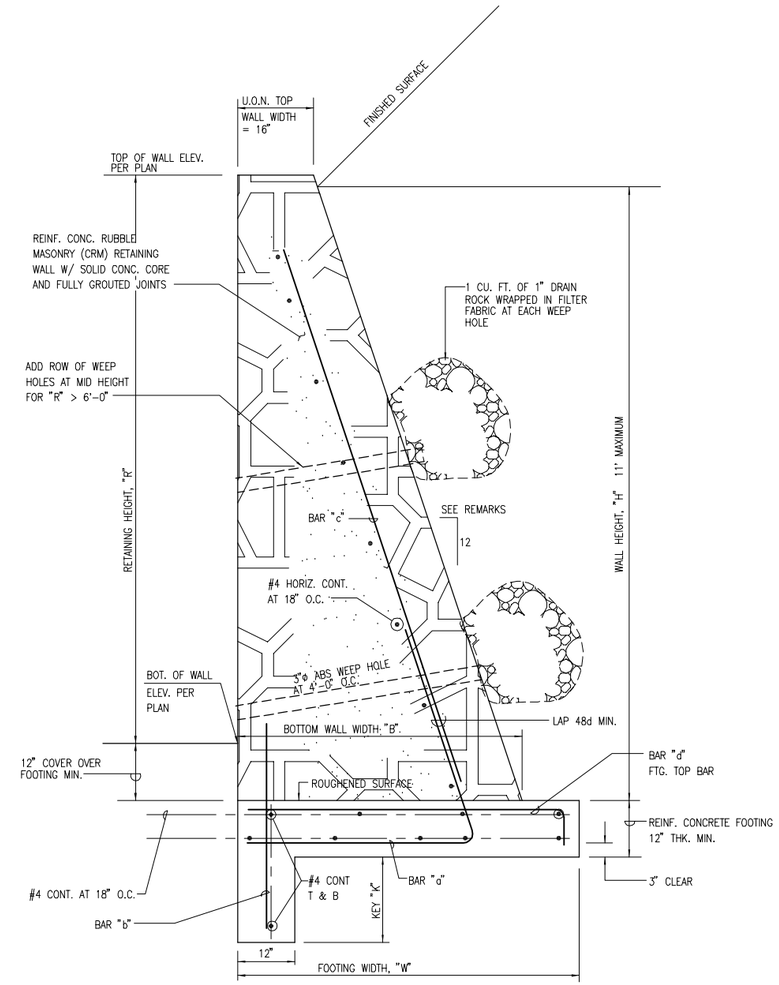

MAX. RETAINING HEIGHT "R"	WALL HEIGHT "H"	FOOTING WIDTH "W"	BOTTOM WALL WIDTH "B"	KEY DEPTH "K"	BAR "a"	BAR "b"	BAR "c"	BAR "d"	REMARKS
10'	11'	7'-9"	6'-0"	18"	#5 @ 12"	#4x48" @ 12"	#5 @ 12"	#5 @ 12"	5 : 12 BATTERED
8'	9'	6'-4"	4'-4"	12"	#5 @ 18"	#4x42" @ 12"	#5 @ 18"	#5 @ 18"	4 : 12 BATTERED
6'	7'	5'-0"	3'-8"	12"	#4 @ 18"	#4x42" @ 12"	#4 @ 18"	#5 @ 18"	4 : 12 BATTERED
4'	5'	3'-6"	2'-8"	12"	#4 @ 18"	#4x42" @ 18"	#4 @ 18"	#4 @ 18"	4 : 12 BATTERED
2'	3'	2'-6"	2'-0"	4"	#4 @ 18"	N.R.	N.R.	#4 @ 18"	4 : 12 BATTERED

1 CRM RETAINING WALL SCHEDULE
NOT TO SCALE

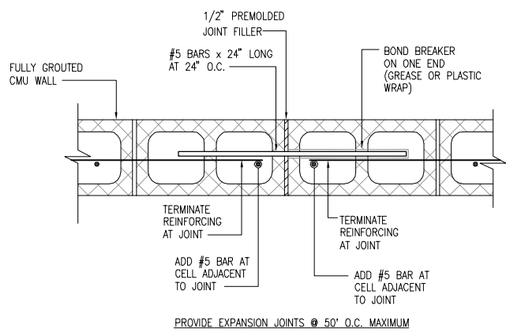

5 CMU WALL EXPANSION JOINT
NOT TO SCALE

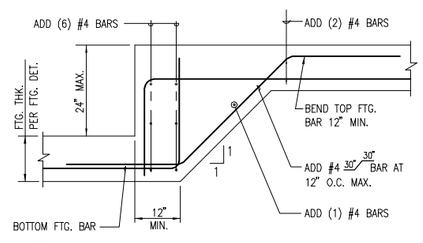

NOTE:
NOT ALL TYPICAL FOOTING REINFORCING STEEL ARE SHOWN.
SEE RETAINING WALL DETAIL FOR BALANCE OF INFORMATION.

4 CONCRETE STEP FOOTING
NOT TO SCALE

Engineering Partners, Inc.
Progressive Solutions
455 ELANIKAULA STREET
HILO, HAWAII, 96720
www.epintegrated.com

LEN WEN FANG
LICENSED PROFESSIONAL ENGINEER
Exp. 04/30/16
No. 9361-C
HAWAII, U.S.A.

MARK	DATE	DESCRIPTION
1	4/10/14	MULTIPLE CHANGES TO SHEET

SIGNATURE

REVIEWED: DEPARTMENT OF PARKS AND RECREATION DATE

COUNTY OF HAWAI'I
DEPARTMENT OF PARKS & RECREATION
101 PAUAHI STREET SUITE 6 / HILO, HAWAII 96720 / PHONE: 808.961.8311 / FAX: 808.961.8411

PAHOA PARK MASTER PLAN
PHASE I - BID SUBMITTAL 2014-02-10

JOB NO.: PR-4234 PAHOA, PUNA, HAWAII TMK: (3) 1-5-002:020

PLAN SHEET DESCRIPTION: CIVIL DETAILS

DESIGNED BY: OH
DRAWN BY: OH
CHECKED BY: YWF

SHEET NO. C-012 OF SHEETS

DATE: 2014-02-10

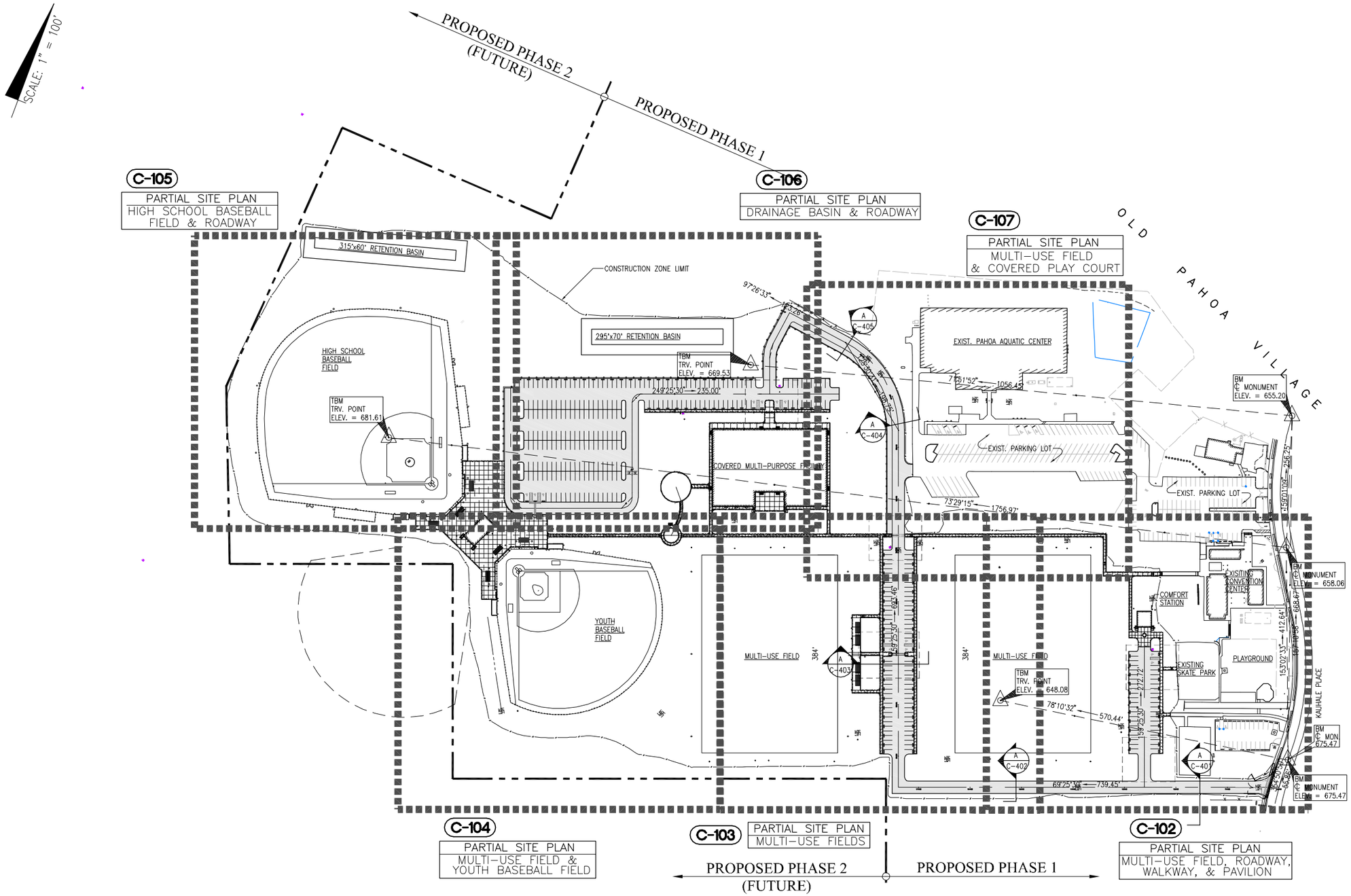

A OVERALL SITE PLAN

SCALE: 1" = 100'

0 100' 200'

Engineering Partners, Inc.
Progressive Solutions
455 ELANIKAULA STREET
HILO, HAWAII, 96720
www.epintegrated.com

LEN WEN FANG
LICENSED PROFESSIONAL ENGINEER
Exp. 04/30/16
No. 9361-C
HAWAII, U.S.A.

SIGNATURE

MARK	DATE	DESCRIPTION
1	4/10/14	MULTIPLE CHANGES TO SHEET

REVIEWED: DATE

DEPARTMENT OF PARKS AND RECREATION

COUNTY OF HAWAII
DEPARTMENT OF PARKS & RECREATION
101 PAUAHI STREET, SUITE 6 / HILO, HAWAII 96720 / PHONE: 808.961.8311 / FAX: 808.961.8411

PAHOA PARK MASTER PLAN
PHASE I - BID SUBMITTAL 2014-02-10

JOB NO.: PR-4234 PAHOA, PUNA, HAWAII TMK: (3) 1-5-002:020

PLAN SHEET DESCRIPTION: CIVIL OVERALL SITE PLAN

DESIGNED BY: OH
DRAWN BY: OH
CHECKED BY: YWF

SHEET NO. C-101

1 OF SHEETS

DATE: 2014-02-10

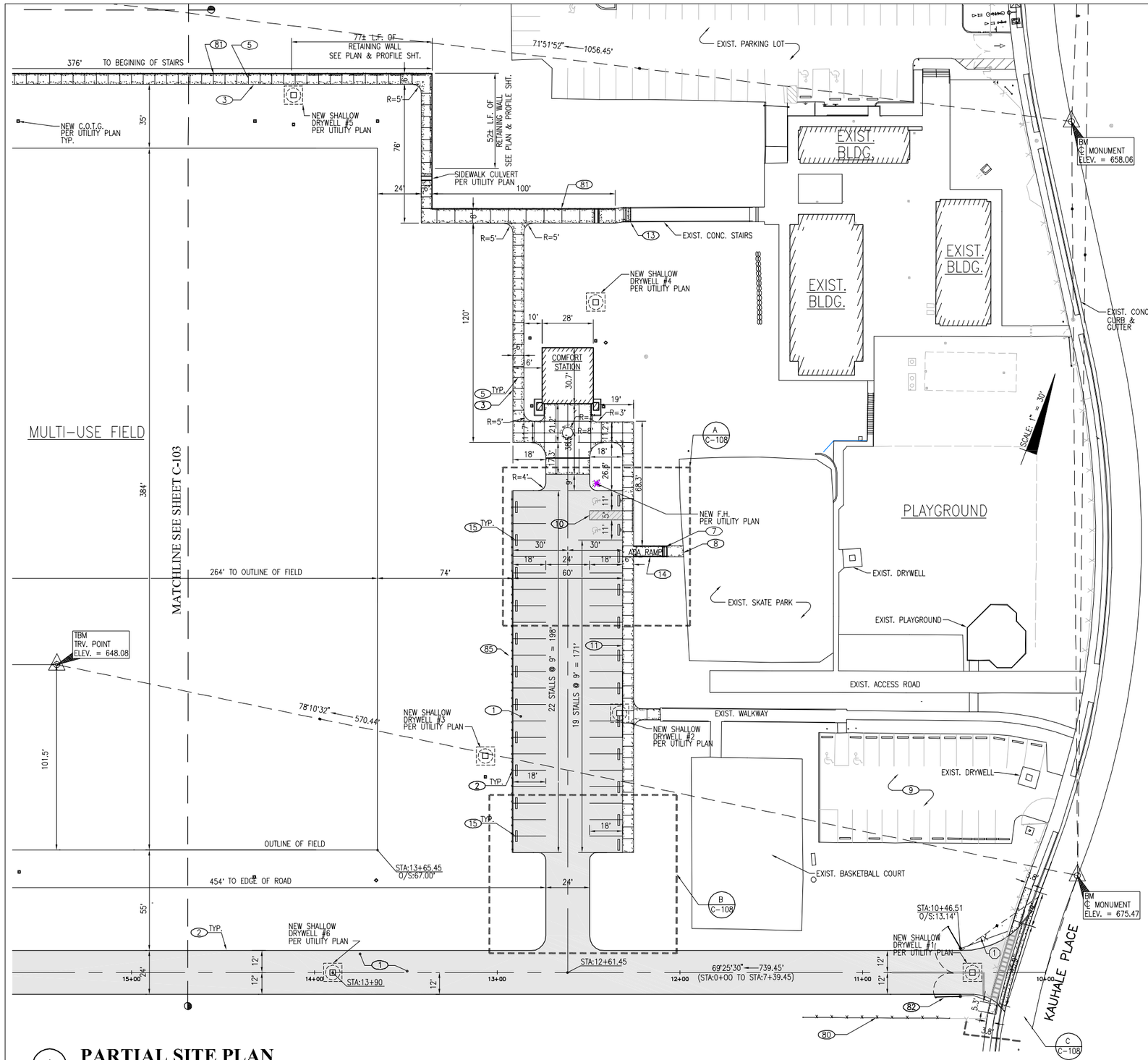

A PARTIAL SITE PLAN

SCALE: 1" = 30' 0 30' 60'

CURVE DATA					
MARK	R	Lc	Δ	T	DESC.
1	45'	51.4'	69°39'33"	31.31'	DRIVEWAY ENTRY

PAV'T CONSTRUCTION NOTES

1	CONSTRUCT 2" COUNTY MIX 3 A.C. PAV'T / 4" A.B. / 6" SUB-BASE PER DET.	8/C-008
2	CONSTRUCT A.C. PAV'T EDGE PER DET.	9/C-008
3	CONSTRUCT 4" THICK CONC. WALK AND RAMP PER DET.	3/C-007
5	CONSTRUCT CRACK CONTROL JOINT PER DET.	12/C-008
6	CONSTRUCT CONC. STAIRS W/ HANDRAILS PER DET.	4/C-009, 1/C-009
7	CONSTRUCT 36" HIGH HANDRAILS WITH THICKEN SLAB EDGE PER DET.	4/C-008, 3/C-009
8	CONSTRUCT 6" THICK CONC. WALK AND RAMP PER DET.	7/C-007
9	EXIST. PARKING LOT TO BE RESEALED AND RESTRIPED PER DET.	10/C-008
10	CONSTRUCT & STRIPE OUT ADA ACCESSIBLE STANDARD & VAN PARKING W/ SIGNS PER DET.	1/C-007, 2/C-007
11	CONSTRUCT 6" CURB FACE AT A.C. PAVEMENT PER DET.	11/C-008
12	CONSTRUCT A.C. PAVEMENT FLUSH W/ CON. PER DET.	3/C-008
13	CONNECT NEW CONC. STAIRS & HANDRAILS TO EXIST. STAIRWAY PER DET.	2/C-009
14	CONSTRUCT ADA ACCESSIBLE RAMP PER DET.	1/C-008
15	INSTALL PRE-CAST CONC. WHEEL STOP PER DET.	7/C-008

FENCING CONSTRUCTION NOTES

80	CONSTRUCT 6' HIGH CHAIN LINK FENCE PER CITY & COUNTY OF HONOLULU STD. DET. FOR PARKS & RECS. CONSTRUCTION STD. DET. F-2	
81	CONSTRUCT 4' HIGH CHAIN LINK FENCE PER CITY & COUNTY OF HONOLULU STD. DET. FOR PARKS & RECS. CONSTRUCTION STD. DET. F-1	
82	CONSTRUCT 4' WIDE GATE PER CITY & COUNTY OF HONOLULU STD. DET. FOR PARKS & RECS CONSTRUCTION STD. DET. F-8 -GATE FRAME TO BE CONSTRUCTED OF 1-1/2" N.D. PIPE & INSTALL GATE STOP POST PER DETAIL	
83	CONSTRUCT DOUBLE SWING CHAIN LINK FENCE GATE PER DETAIL WIDTH OF DOUBLE SWING CHAIN LINK FENCE GATE PER PLAN	7/C-009
85	INSTALL NEW PIPE BOLLARDS SPACED 12' APART WITH WELDED RING FOR CABLE ATTACHMENT; PROVIDE 1/2"ø 7x19 VINYL COATED CABLE WITH "S" HOOKS	4/C-006

LEGEND

NEW PAVEMENT AREAS

NEW CONCRETE

Engineering Partners, Inc.
Progressive Solutions
455 ELANIKAULA STREET
HILO, HAWAII, 96720
www.epintegrated.com

LEN WEN FANG LICENSED PROFESSIONAL ENGINEER Exp. 04/30/16 No. 9361-C HAWAII, U.S.A.

SIGNATURE

MARK	DATE	DESCRIPTION
1	4/10/14	MULTIPLE CHANGES TO SHEET

REVIEWED: DEPARTMENT OF PARKS AND RECREATION — DATE

COUNTY OF HAWAII
DEPARTMENT OF PARKS & RECREATION
101 PAUAHI STREET, SUITE 6 / HILO, HAWAII 96720 / PHONE: 808.961.8311 / FAX: 808.961.8411

PAHOA PARK MASTER PLAN
PHASE I - BID SUBMITTAL 2014-02-10

JOB NO.: PR-4234 PAHOA, PUNA, HAWAII TMK: (3) 1-5-002:020

DESIGNED BY: OH
DRAWN BY: OH
CHECKED BY: YMF

SHEET NO. C-102 OF SHEETS

DATE: 2014-02-10

PLAN SHEET DESCRIPTION: CIVIL PARTIAL SITE PLAN

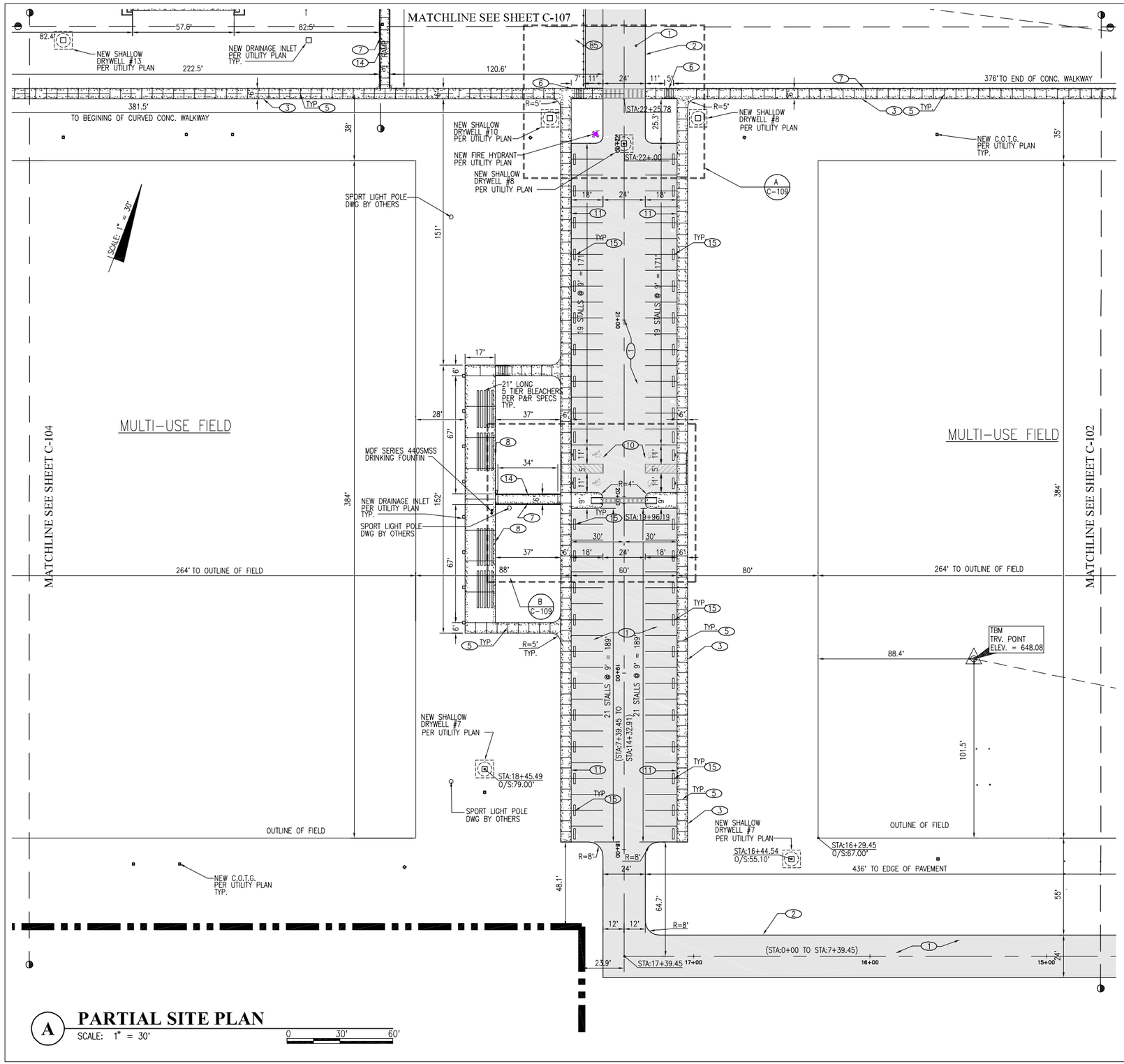

PAV'T CONSTRUCTION NOTES

1	CONSTRUCT 2" COUNTY MIX 3 A.C. PAV'T / 4" A.B. / 6" SUB-BASE PER DET.	8/C-008
2	CONSTRUCT A.C. PAV'T EDGE PER DET.	9/C-008
3	CONSTRUCT 4" THICK CONC. WALK AND RAMP PER DET.	3/C-007
5	CONSTRUCT CRACK CONTROL JOINT PER DET.	12/C-008
6	CONSTRUCT CONC. STAIRS W/ HANDRAILS PER DET.	4/C-009, 1/C-009
7	CONSTRUCT 36" HIGH HANDRAILS W/ THICKEN SLAB EDGE PER DET.	4/C-008, 3/C-009
8	CONSTRUCT 6" THICK CONC. WALK AND RAMP PER DET.	3/C-007
10	CONSTRUCT & STRIPE OUT ADA ACCESSIBLE STANDARD & VAN PARKING W/ SIGNS PER DET.	1/C-007, 2/C-007
11	CONSTRUCT 6" CURB FACE AT A.C. PAVEMENT PER DET.	11/C-008
12	CONSTRUCT A.C. PAVEMENT FLUSH W/ CON. PER DET.	3/C-008
13	CONNECT NEW CONC. STAIRS & HANDRAILS TO EXIST. STAIRWAY	2/C-009
14	CONSTRUCT ADA ACCESSIBLE RAMP PER DET.	1/C-008
15	INSTALL PRE-CAST CONC. WHEEL STOP PER DET.	7/C-008

FENCING CONSTRUCTION NOTES

80	CONSTRUCT 6' HIGH CHAIN LINK FENCE PER CITY & COUNTY OF HONOLULU STD. DET. FOR PARKS & RECS. CONSTRUCTION STD. DET. F-2	
81	CONSTRUCT 4' HIGH CHAIN LINK FENCE PER CITY & COUNTY OF HONOLULU STD. DET. FOR PARKS & RECS. CONSTRUCTION STD. DET. F-1	
85	INSTALL NEW PIPE BOLLARDS SPACED 12' APART WITH WELDED RING FOR CABLE ATTACHMENT; PROVIDE ¼"ø 7x19 VINYL COATED CABLE WITH "S" HOOKS	4/C-006

LEGEND

NEW PAVEMENT

NEW CONCRETE

A PARTIAL SITE PLAN

SCALE: 1" = 30'

0 30' 60'

Engineering Partners, Inc.
Progressive Solutions
455 ELANIKAULA STREET
HILO, HAWAII, 96720
www.epintegrated.com

LEN WEN FANG
LICENSED PROFESSIONAL ENGINEER
Exp. 04/30/16
No. 9361-C
HAWAII, U.S.A.

SIGNATURE

MARK	DATE	DESCRIPTION
1	4/10/14	MULTIPLE CHANGES TO SHEET

REVIEWED:

DEPARTMENT OF PARKS AND RECREATION — DATE

COUNTY OF HAWAI'I
DEPARTMENT OF PARKS & RECREATION
101 PAUAHI STREET, SUITE 6 | HILO, HAWAII 96720 | PHONE: 808.961.8311 | FAX: 808.961.8411

PAHOA PARK MASTER PLAN
PHASE I - BID SUBMITTAL 2014-02-10

JOB NO.: PR-4234 — PAHOA, PUNA, HAWAII — TMK: (3) 1-5-002:020

PLAN SHEET DESCRIPTION: CIVIL PARTIAL SITE PLAN

DESIGNED BY: OH
DRAWN BY: OH
CHECKED BY: YWF

SHEET NO. C-103
1 OF SHEETS

DATE: 2014-02-10

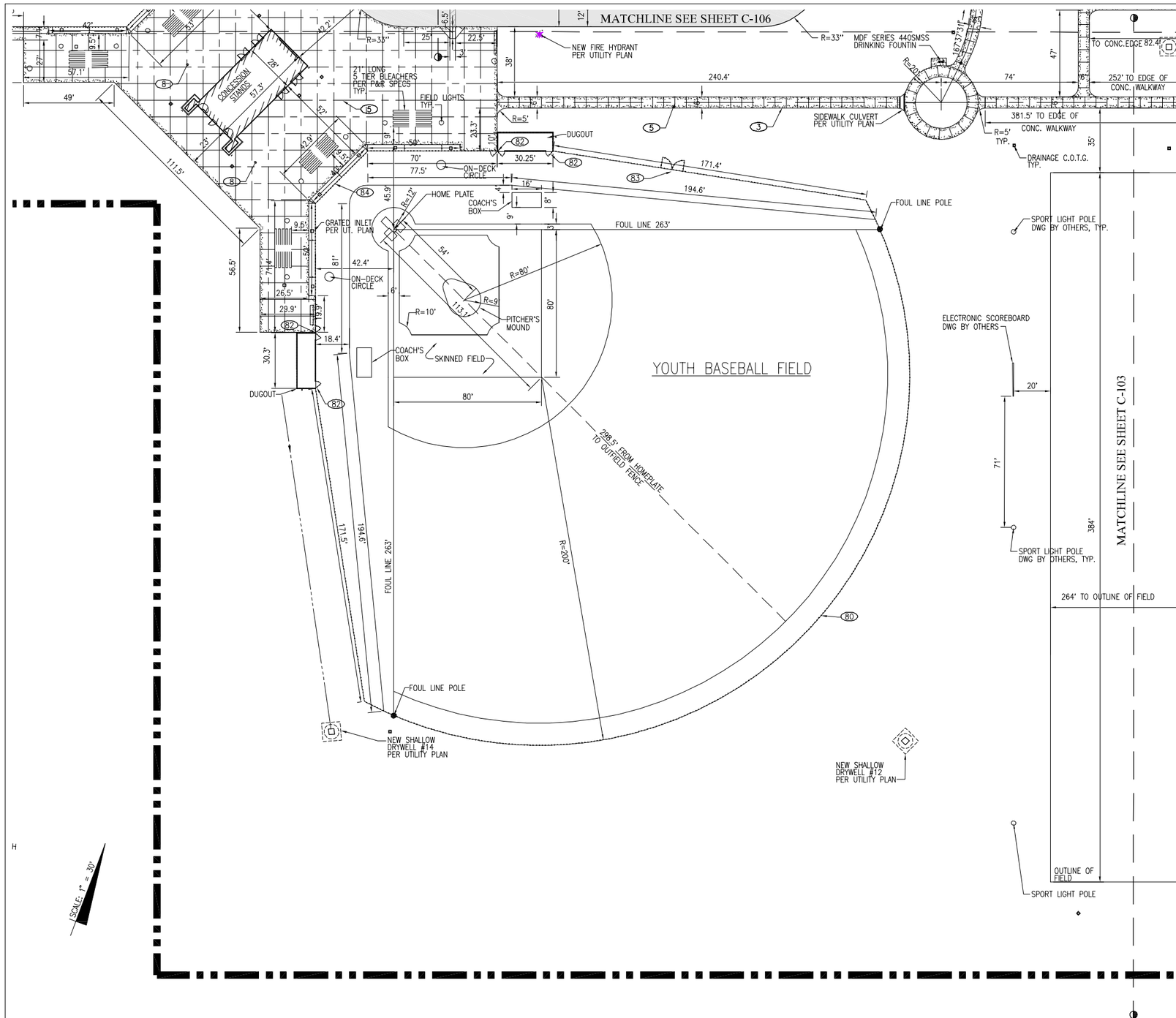

PAV'T CONSTRUCTION NOTES

2	CONSTRUCT A.C. PAV'T EDGE PER DET.	9/C-008
3	CONSTRUCT 4" THICK CONC. WALK AND RAMP PER DET.	3/C-007
4	CONSTRUCT 6" CONCRETE PLANTER CURB PER DET.	4/C-007
5	CONSTRUCT CRACK CONTROL JOINT PER DET.	12/C-008
6	CONSTRUCT CONC. STAIRS W/ HANDRAILS PER DET.	4/C-009 1/C-009
8	CONSTRUCT 6" THICK CONC. WALK AND RAMP PER DET.	3/C-007

FENCING CONSTRUCTION NOTES

80	CONSTRUCT 6' HIGH CHAIN LINK FENCE PER CITY & COUNTY OF HONOLULU STD. DET. FOR PARKS & RECS. CONSTRUCTION STD. DET. F-2	
81	CONSTRUCT 4' HIGH CHAIN LINK FENCE PER CITY & COUNTY OF HONOLULU STD. DET. FOR PARKS & RECS. CONSTRUCTION STD. DET. F-1	
82	CONSTRUCT 4' WIDE GATE PER CITY & COUNTY OF HONOLULU STD. DET. FOR PARKS & RECS CONSTRUCTION STD. DET. F-8 -GATE FRAME TO BE CONSTRUCTED OF 1-1/2" N.D. PIPE & INSTALL GATE STOP POST PER DETAIL	
83	CONSTRUCT DOUBLE SWING CHAIN LINK FENCE GATE PER DETAIL WIDTH OF DOUBLE SWING CHAIN LINK FENCE GATE PER PLAN	7/C-009
84	CONSTRUCT BACKSTOP PER DETAILS ON SHEETS C-010 & C-011.	

LEGEND

NEW PAVEMENT

NEW CONCRETE

A PARTIAL SITE PLAN

SCALE: 1" = 30' 0 30' 60'

Engineering Partners, Inc.
Progressive Solutions
455 ELANIKAULA STREET
HILO, HAWAII, 96720
www.epintegrated.com

LEN WEN FANG LICENSED PROFESSIONAL ENGINEER Exp. 04/30/16 No. 9361-C HAWAII, U.S.A.

SIGNATURE

MARK	DATE	DESCRIPTION
1	4/10/14	MULTIPLE CHANGES TO SHEET

REVIEWED: DEPARTMENT OF PARKS AND RECREATION DATE

COUNTY OF HAWAI'I
DEPARTMENT OF PARKS & RECREATION
101 PAUAHI STREET, SUITE 6 | HILO, HAWAII 96720 | PHONE: 808.961.8311 | FAX: 808.961.8411

PAHOA PARK MASTER PLAN
PHASE I - BID SUBMITTAL 2014-02-10

JOB NO.: PR-4234 PAHOA, PUNA, HAWAII TMK: (3) 1-5-002:020

PLAN SHEET DESCRIPTION: CIVIL PARTIAL SITE PLAN

DESIGNED BY: OH
DRAWN BY: OH
CHECKED BY: YWF
DATE: 2014-02-10

SHEET NO. C-104
1 OF SHEETS

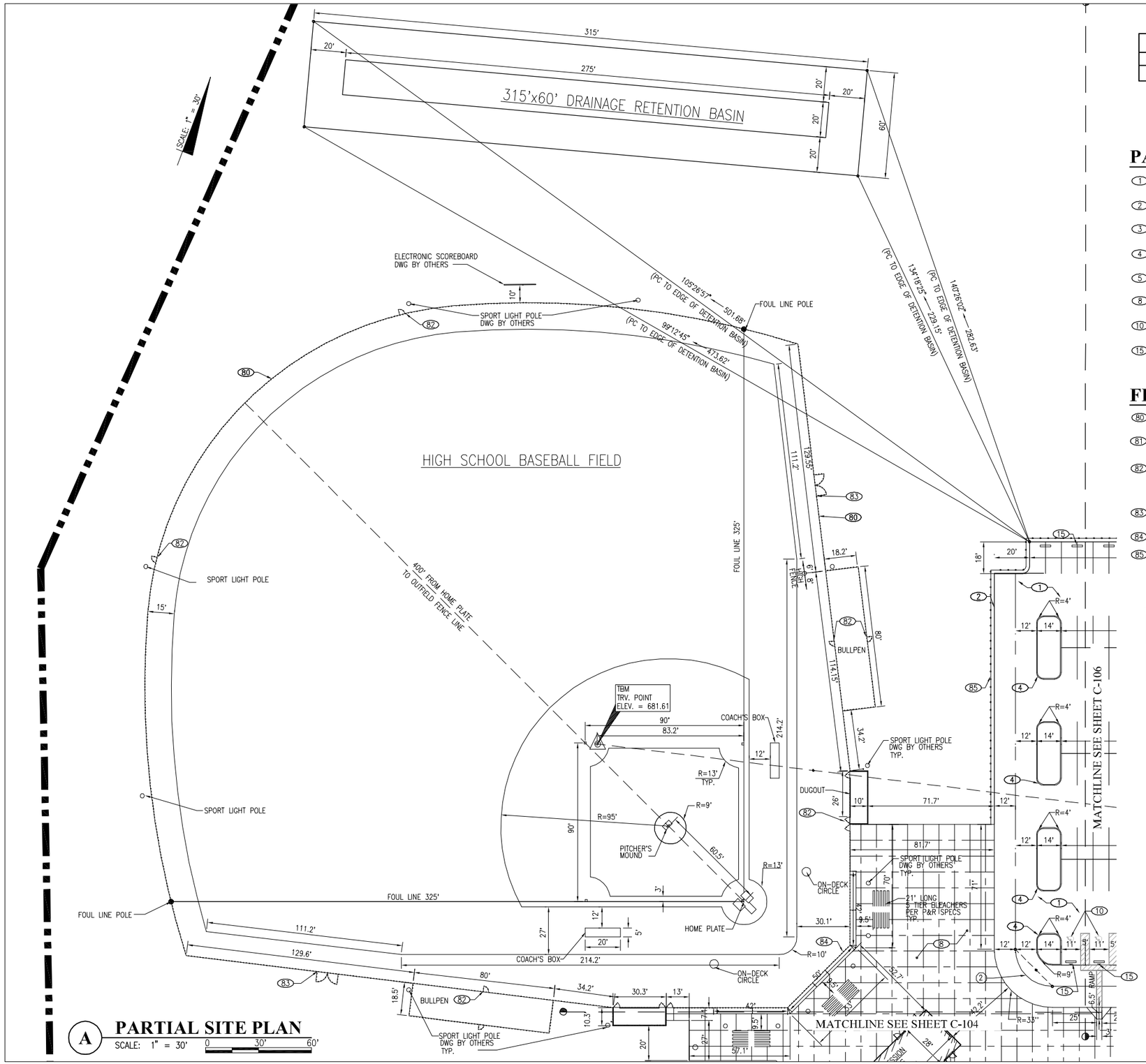

A PARTIAL SITE PLAN

SCALE: 1" = 30' 0 30' 60'

CURVE DATA					
MARK	R	Lc	Δ	T	DESC.
2	21'	29.70'	90°00'00"	21'	℄ ALIGN

PAV'T CONSTRUCTION NOTES

1. CONSTRUCT 2" COUNTY MIX 3 A.C. PAV'T / 4" A.B. / 6" SUB-BASE PER DET. — 8/C-008
2. CONSTRUCT A.C. PAV'T EDGE PER DET. — 9/C-008
3. CONSTRUCT 4" THICK CONC. WALK AND RAMP PER DET. — 3/C-007
4. CONSTRUCT 6" CONCRETE PLANTER CURB PER DET. — 4/C-007
5. CONSTRUCT CRACK CONTROL JOINT PER DET. — 12/C-008
8. CONSTRUCT 6" THICK CONC. WALK AND RAMP PER DET. — 3/C-007
10. CONSTRUCT ADA ACCESSIBLE STANDARD & VAN PARKING W/ SIGNS PER DET. — 1/C-007, 2/C-007
15. INSTALL PRE-CAST CONC. WHEEL STOP PER DET. — 7/C-008

FENCING CONSTRUCTION NOTES

80. CONSTRUCT 6' HIGH CHAIN LINK FENCE PER CITY & COUNTY OF HONOLULU STD. DET. FOR PARKS & RECS. CONSTRUCTION STD. DET. F-2
81. CONSTRUCT 4' HIGH CHAIN LINK FENCE PER CITY & COUNTY OF HONOLULU STD. DET. FOR PARKS & RECS. CONSTRUCTION STD. DET. F-1
82. CONSTRUCT 4' WIDE GATE PER CITY & COUNTY OF HONOLULU STD. DET. FOR PARKS & RECS CONSTRUCTION STD. DET. F-8 -GATE FRAME TO BE CONSTRUCTED OF 1-1/2" N.D. PIPE & INSTALL GATE STOP POST PER DETAIL
83. CONSTRUCT DOUBLE SWING CHAIN LINK FENCE GATE PER DETAIL WIDTH OF DOUBLE SWING CHAIN LINK FENCE GATE PER PLAN — 7/C-009
84. CONSTRUCT BACKSTOP PER DETAILS ON SHEETS C-010 & C-011.
85. INSTALL NEW PIPE BOLLARDS SPACED 12" APART WITH WELDED RING FOR CABLE ATTACHMENT; PROVIDE X"ø 7x19 VINYL COATED CABLE WITH "S" HOOKS — 4/C-006

LEGEND

NEW PAVEMENT

NEW CONCRETE

Engineering Partners, Inc.
Progressive Solutions
455 ELANIKAULA STREET
HILO, HAWAII, 96720
www.epintegrated.com

KEN WEN FANG
LICENSED PROFESSIONAL ENGINEER
Exp. 04/30/16
No. 9361-C
HAWAII, U.S.A.

SIGNATURE

MARK	DATE	DESCRIPTION
1	4/10/14	MULTIPLE CHANGES TO SHEET

REVIEWED:

DEPARTMENT OF PARKS AND RECREATION — DATE

COUNTY OF HAWAI'I
DEPARTMENT OF PARKS & RECREATION
101 PAUAHI STREET, SUITE 6 | HILO, HAWAII 96720 | PHONE: 808.961.8311 | FAX: 808.961.8411

PAHOA PARK MASTER PLAN
PHASE I - BID SUBMITTAL 2014-02-10

JOB NO.: PR-4234 — PAHOA, PUNA, HAWAII — TMK: (3) 1-5-002:020

PLAN SHEET DESCRIPTION: CIVIL PARTIAL SITE PLAN

DESIGNED BY: OH
DRAWN BY: OH
CHECKED BY: YWF
DATE: 2014-02-10

SHEET NO. C-105 OF SHEETS

CURVE DATA					
MARK	R	Lc	Δ	T	DESC.
2	21'	29.70'	90°00'00"	21'	℄ ALIGN
3	21'	29.70'	90°00'00"	21'	℄ ALIGN
4	16'	22.63'	90°00'00"	16'	℄ ALIGN
5	16'	22.63'	90°00'00"	16'	℄ ALIGN
6	69.5'	43.5	36°30'04"	22.91'	SIDEWALK

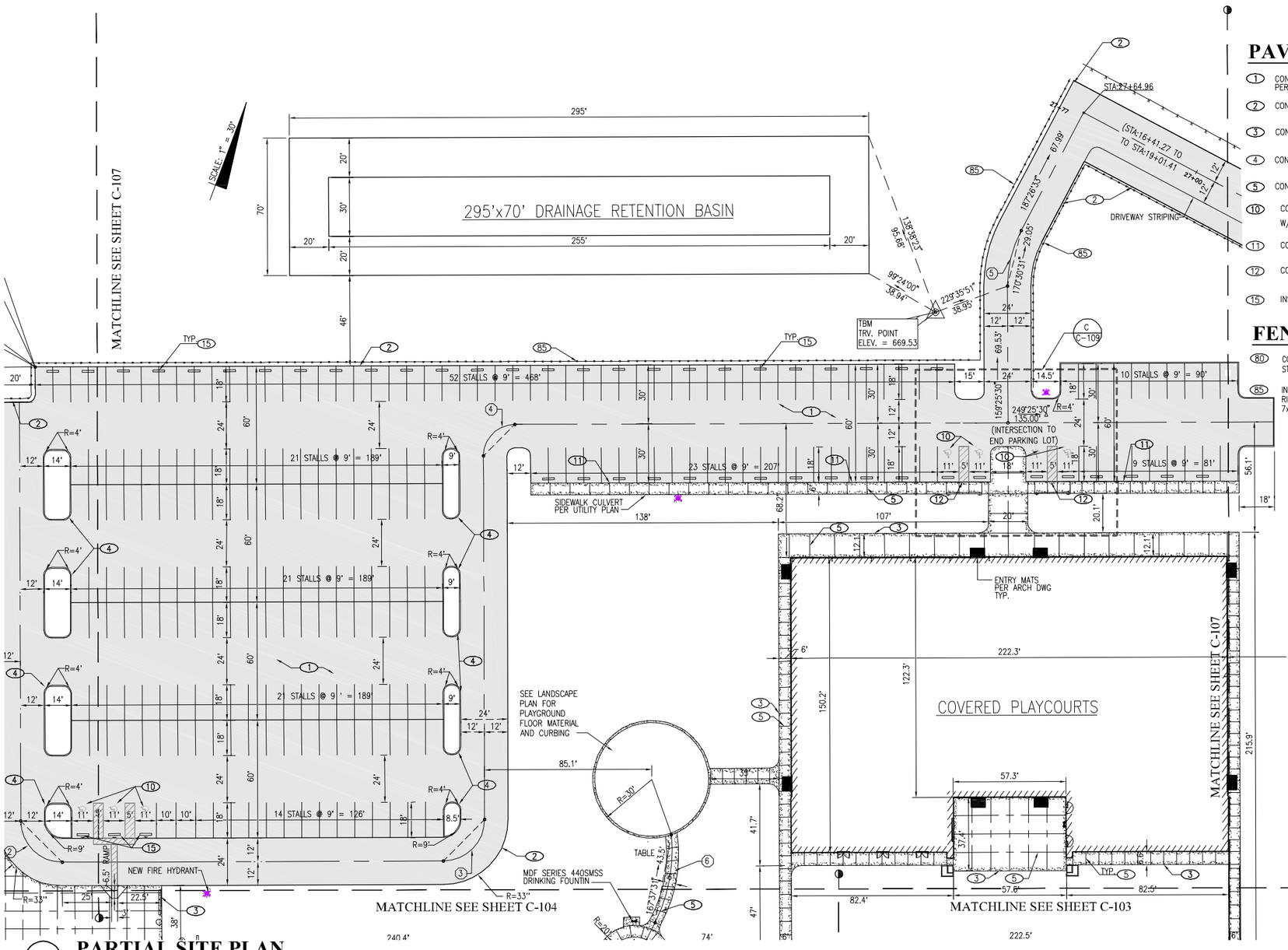

PAV'T CONSTRUCTION NOTES

1. CONSTRUCT 2" COUNTY MIX 3 A.C. PAV'T / 4" A.B. / 6" SUB-BASE PER DET. — 8/C-008
2. CONSTRUCT A.C. PAV'T EDGE PER DET. — 9/C-008
3. CONSTRUCT 4" THICK CONC. WALK AND RAMP PER DET. — 3/C-007
4. CONSTRUCT 6" CONCRETE PLANTER CURB PER DET. — 4/C-007
5. CONSTRUCT CRACK CONTROL JOINT PER DET. — 12/C-008
10. CONSTRUCT ADA ACCESSIBLE STANDARD & VAN PARKING W/ SIGNS PER DET. — 1/C-007, 2/C-007
11. CONSTRUCT 6" CURB FACE AT A.C. PAVEMENT PER DET. — 11/C-008
12. CONSTRUCT A.C. PAVEMENT FLUSH W/ CON. PER DET. — 3/C-008
15. INSTALL PRE-CAST CONC. WHEEL STOP PER DET. — 7/C-008

FENCING CONSTRUCTION NOTES

80. CONSTRUCT 6' HIGH CHAIN LINK FENCE PER CITY & COUNTY OF HONOLULU STD. DET. FOR PARKS & RECS. CONSTRUCTION STD. DET. F-2
85. INSTALL NEW PIPE BOLLARDS SPACED 12' APART WITH WELDED RING FOR CABLE ATTACHMENT; PROVIDE ½"ø 7x19 VINYL COATED CABLE WITH "S" HOOKS — 4/C-006

LEGEND

- NEW PAVEMENT
- NEW CONCRETE
- COMPACTED AGGREGATE

A **PARTIAL SITE PLAN**
SCALE: 1" = 30'
0 30' 60'

Engineering Partners, Inc.
Progressive Solutions
455 ELANIKAULA STREET
HILO, HAWAII, 96720
www.epintegrated.com

LEN WEN FANG
LICENSED PROFESSIONAL ENGINEER
Exp. 04/30/16
No. 9361-C
HAWAII, U.S.A.

SIGNATURE

MARK	DATE	DESCRIPTION
1	4/10/14	MULTIPLE CHANGES TO SHEET

REVIEWED: DATE
DEPARTMENT OF PARKS AND RECREATION

COUNTY OF HAWAI'I
DEPARTMENT OF PARKS & RECREATION
101 PAUAHI STREET, SUITE 6 | HILO, HAWAII 96720 | PHONE: 808.961.8311 | FAX: 808.961.8411

PAHOA PARK MASTER PLAN
PHASE I - BID SUBMITTAL 2014-02-10

JOB NO.: PR-4234
PAHOA, PUNA, HAWAII
TMK: (3) 1-5-002:020

PLAN SHEET DESCRIPTION: CIVIL PARTIAL SITE PLAN

DESIGNED BY: OH
DRAWN BY: OH
CHECKED BY: YWF

SHEET NO. C-106
1 OF SHEETS

DATE: 2014-02-10

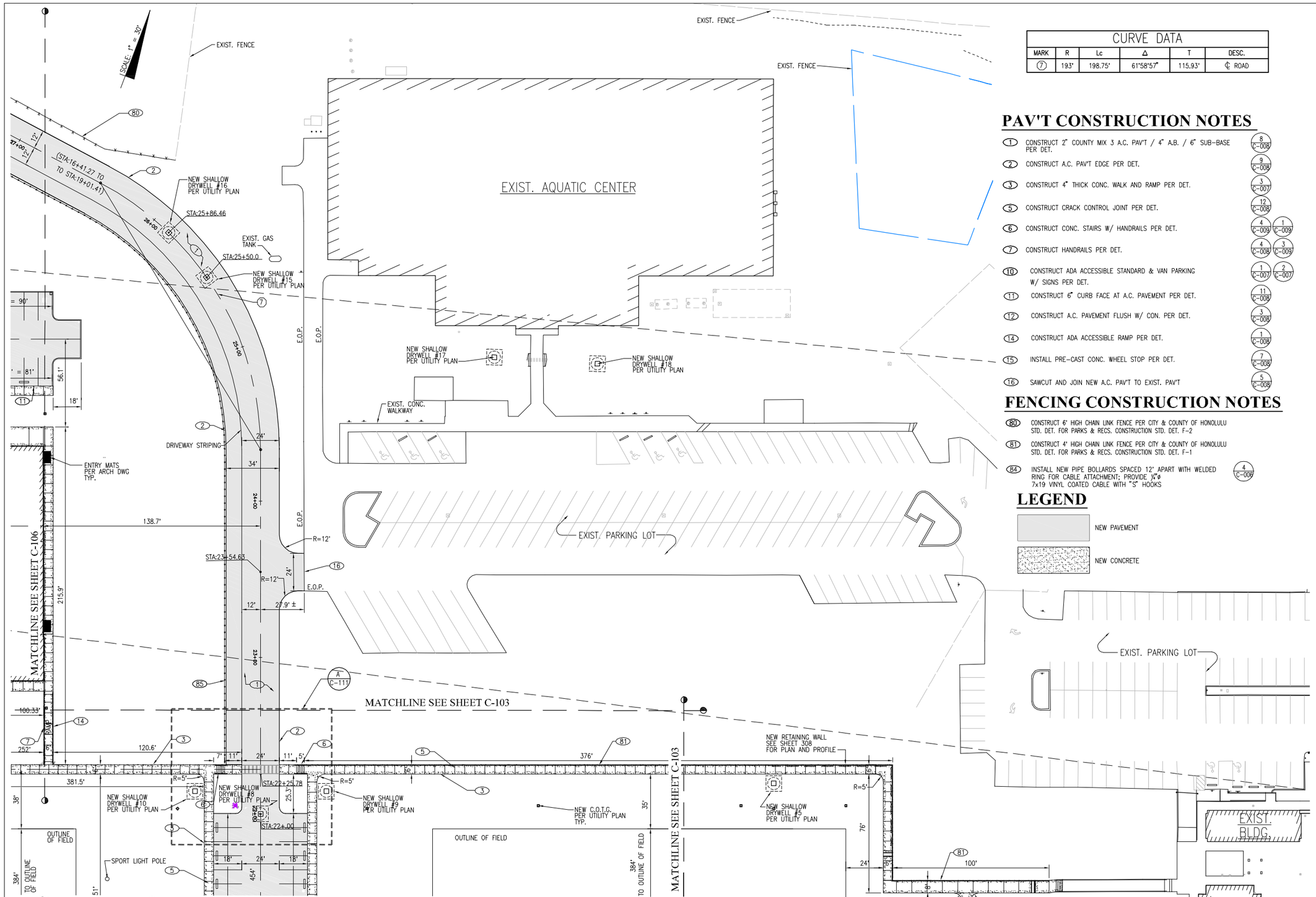

PARTIAL SITE PLAN

SCALE: 1" = 30'

CURVE DATA					
MARK	R	Lc	Δ	T	DESC.
7	193'	198.75'	61°58'57"	115.93'	℄ ROAD

PAV'T CONSTRUCTION NOTES

1	CONSTRUCT 2" COUNTY MIX 3 A.C. PAV'T / 4" A.B. / 6" SUB-BASE PER DET.	8/C-008
2	CONSTRUCT A.C. PAV'T EDGE PER DET.	9/C-008
3	CONSTRUCT 4" THICK CONC. WALK AND RAMP PER DET.	3/C-007
5	CONSTRUCT CRACK CONTROL JOINT PER DET.	12/C-008
6	CONSTRUCT CONC. STAIRS W/ HANDRAILS PER DET.	4/C-009, 1/C-009
7	CONSTRUCT HANDRAILS PER DET.	4/C-008, 3/C-009
10	CONSTRUCT ADA ACCESSIBLE STANDARD & VAN PARKING W/ SIGNS PER DET.	1/C-007, 2/C-007
11	CONSTRUCT 6" CURB FACE AT A.C. PAVEMENT PER DET.	11/C-008
12	CONSTRUCT A.C. PAVEMENT FLUSH W/ CON. PER DET.	3/C-008
14	CONSTRUCT ADA ACCESSIBLE RAMP PER DET.	1/C-008
15	INSTALL PRE-CAST CONC. WHEEL STOP PER DET.	7/C-008
16	SAWCUT AND JOIN NEW A.C. PAV'T TO EXIST. PAV'T	5/C-008

FENCING CONSTRUCTION NOTES

80	CONSTRUCT 6' HIGH CHAIN LINK FENCE PER CITY & COUNTY OF HONOLULU STD. DET. FOR PARKS & RECS. CONSTRUCTION STD. DET. F-2	
81	CONSTRUCT 4' HIGH CHAIN LINK FENCE PER CITY & COUNTY OF HONOLULU STD. DET. FOR PARKS & RECS. CONSTRUCTION STD. DET. F-1	
84	INSTALL NEW PIPE BOLLARDS SPACED 12' APART WITH WELDED RING FOR CABLE ATTACHMENT; PROVIDE ½"ø 7x19 VINYL COATED CABLE WITH "S" HOOKS	4/C-006

LEGEND

NEW PAVEMENT

NEW CONCRETE

Engineering Partners, Inc.
Progressive Solutions
455 ELANIKAULA STREET
HILO, HAWAII, 96720
www.epintegrated.com

FENG WEN FANG
LICENSED PROFESSIONAL ENGINEER
Exp. 04/30/16
No. 9361-C
HAWAII, U.S.A.

SIGNATURE

MARK	DATE	DESCRIPTION
1	4/10/14	MULTIPLE CHANGES TO SHEET

REVIEWED: DEPARTMENT OF PARKS AND RECREATION — DATE

COUNTY OF HAWAII
DEPARTMENT OF PARKS & RECREATION
101 PAUAHI STREET, SUITE 6 / HILO, HAWAII 96720 / PHONE: 808.961.8311 / FAX: 808.961.8411

PAHOA PARK MASTER PLAN
PHASE I - BID SUBMITTAL 2014-02-10

JOB NO.: PR-4234 — PAHOA, PUNA, HAWAII — TMK: (3) 1-5-002:020

PLAN SHEET DESCRIPTION: CIVIL PARTIAL SITE PLAN

DESIGNED BY: OH
DRAWN BY: OH
CHECKED BY: YMF

SHEET NO. C-107 — 1 OF SHEETS

DATE: 2014-02-10

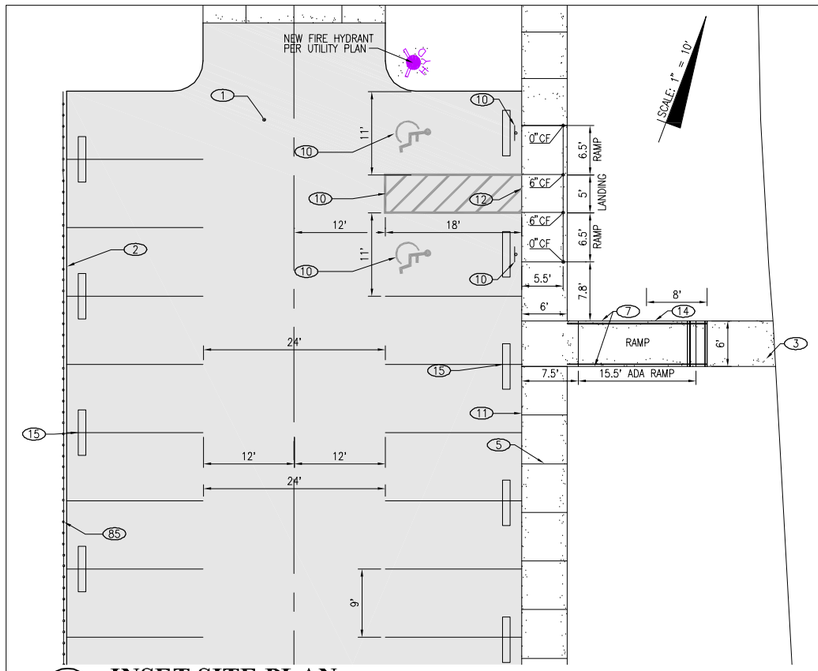

A INSET SITE PLAN

SCALE: 1" = 10'

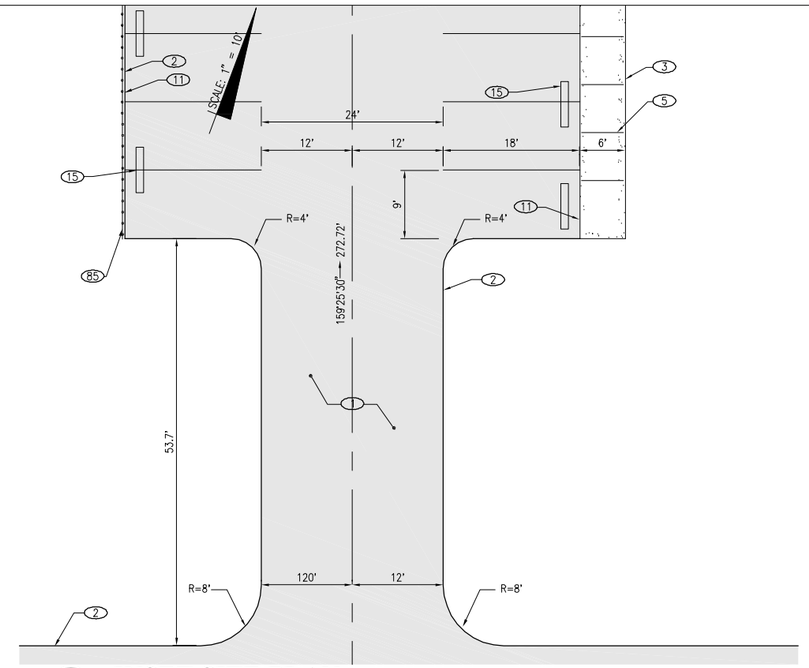

B INSET SITE PLAN

SCALE: 1" = 10'

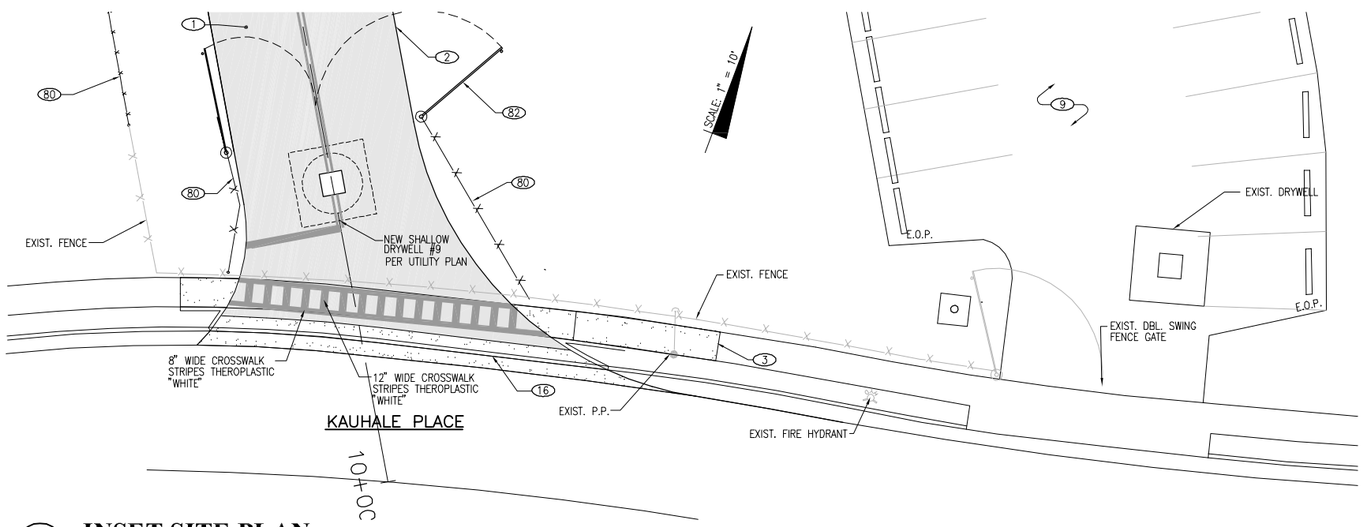

C INSET SITE PLAN

SCALE: 1" = 10'

PAV'T CONSTRUCTION NOTES

1	CONSTRUCT 2" COUNTY MIX 3 A.C. PAV'T / 4" A.B. / 6" SUB-BASE PER DET.	8/C-008
2	CONSTRUCT A.C. PAV'T EDGE PER DET.	9/C-008
3	CONSTRUCT 4" THICK CONC. WALK AND RAMP PER DET.	3/C-007
5	CONSTRUCT CRACK CONTROL JOINT PER DET.	12/C-008
6	CONSTRUCT CONC. STAIRS W/ HANDRAILS PER DET.	4/C-009, 1/C-009
7	CONSTRUCT 36" HIGH HANDRAILS WITH THICKEN SLAB EDGE PER DET.	4/C-008, 3/C-009
8	CONSTRUCT 6" THICK CONC. WALK AND RAMP PER DET.	3/C-007
9	EXIST. PARKING LOT TO BE RESEALED AND RESTRIPED PER DET.	3/C-007
10	CONSTRUCT & STRIPE OUT ADA ACCESSIBLE STANDARD & VAN PARKING W/ SIGNS PER DET.	1/C-007, 2/C-007
11	CONSTRUCT 6" CURB FACE AT A.C. PAVEMENT PER DET.	11/C-008
12	CONSTRUCT A.C. PAVEMENT FLUSH W/ CON. PER DET.	3/C-008
13	CONNECT NEW CONC. STAIRS & HANDRAILS TO EXIST. STAIRWAY PER DET.	2/C-009
14	CONSTRUCT ADA ACCESSIBLE RAMP PER DET.	1/C-008
15	INSTALL PRE-CAST CONC. WHEEL STOP PER DET.	7/C-008
16	CONSTRUCT THRU GUTTER PER DET.	7/C-003

FENCING CONSTRUCTION NOTES

80	CONSTRUCT 6' HIGH CHAIN LINK FENCE PER CITY & COUNTY OF HONOLULU STD. DET. FOR PARKS & RECS. CONSTRUCTION STD. DET. F-2	
81	CONSTRUCT 4' HIGH CHAIN LINK FENCE PER CITY & COUNTY OF HONOLULU STD. DET. FOR PARKS & RECS. CONSTRUCTION STD. DET. F-1	
82	CONSTRUCT 4' WIDE GATE PER CITY & COUNTY OF HONOLULU STD. DET. FOR PARKS & RECS CONSTRUCTION STD. DET. F-8 -GATE FRAME TO BE CONSTRUCTED OF 1-1/2" N.D. PIPE & INSTALL GATE STOP POST PER DETAIL	
83	CONSTRUCT DOUBLE SWING CHAIN LINK FENCE GATE PER DETAIL WIDTH OF DOUBLE SWING CHAIN LINK FENCE GATE PER PLAN	7/C-009
84	CONSTRUCT BACKSTOP PER DETAILS ON SHEETS C-007 & C-008.	
85	INSTALL NEW PIPE BOLLARDS SPACED 12' APART WITH WELDED RING FOR CABLE ATTACHMENT; PROVIDE ¼"ø 7x19 VINYL COATED CABLE WITH "S" HOOKS	4/C-006

LEGEND

NEW PAVEMENT AREAS

NEW CONCRETE

Engineering Partners, Inc.
Progressive Solutions
455 ELANIKAULA STREET
HILO, HAWAII, 96720
www.epintegrated.com

LEN WEN FANG
LICENSED PROFESSIONAL ENGINEER
Exp. 04/30/16
No. 9361-C
HAWAII, U.S.A.

SIGNATURE

MARK	DATE	DESCRIPTION
1	4/10/14	MULTIPLE CHANGES TO SHEET

REVIEWED:
DEPARTMENT OF PARKS AND RECREATION — DATE

COUNTY OF HAWAI'I
DEPARTMENT OF PARKS & RECREATION
101 PAUAHI STREET, SUITE 6 | HILO, HAWAII 96720 | PHONE: 808.961.8311 | FAX: 808.961.8411

PAHOA PARK MASTER PLAN
PHASE I - BID SUBMITTAL 2014-02-10

JOB NO.: PR-4234 — PAHOA, PUNA, HAWAII — TMK: (3) 1-5-002:020

PLAN SHEET DESCRIPTION: CIVIL INSET SITE PLAN

DESIGNED BY: OH
DRAWN BY: OH
CHECKED BY: YWF
DATE: 2014-02-10

SHEET NO. C-108
1 OF SHEETS

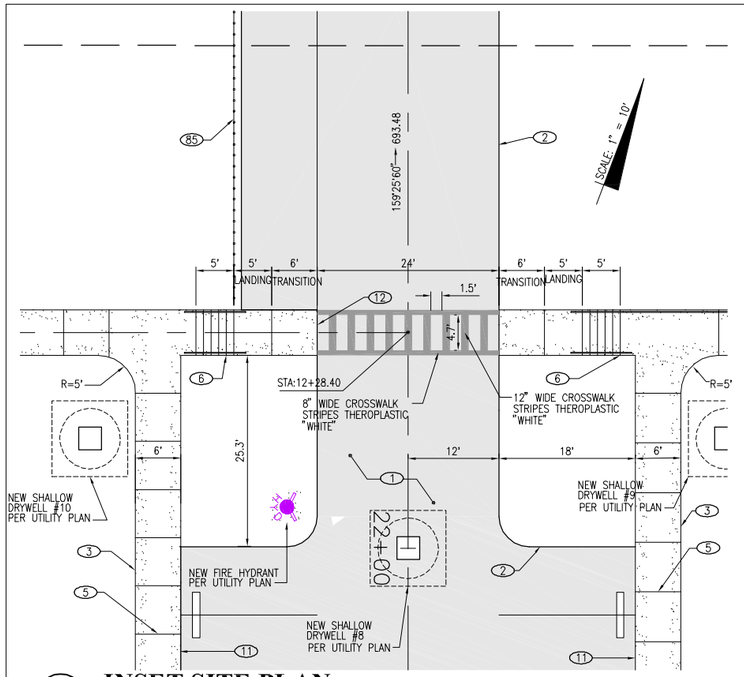

A INSET SITE PLAN

SCALE: 1" = 10' 0 10' 20'

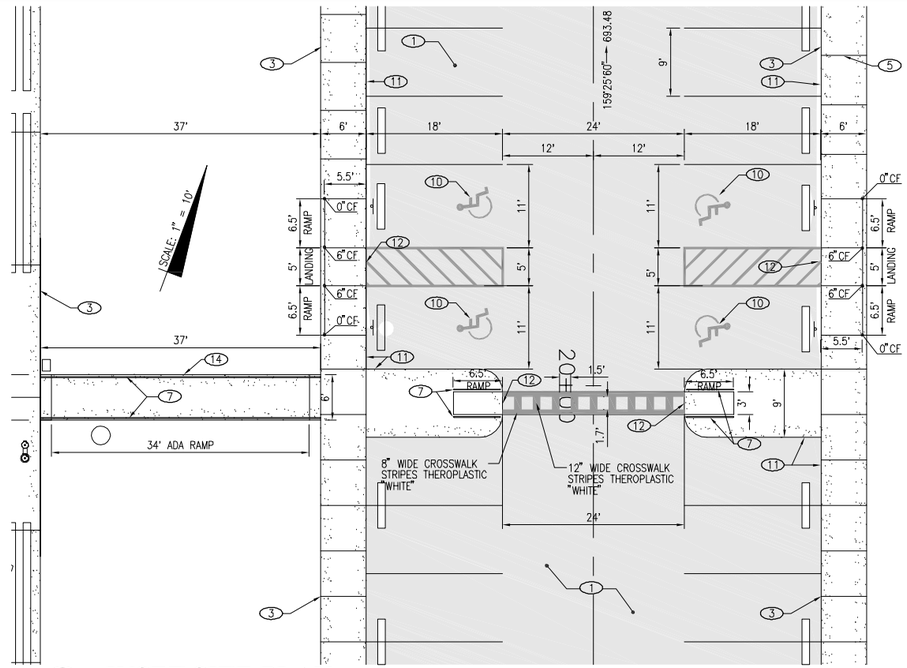

B INSET SITE PLAN

SCALE: 1" = 10' 0 10' 20'

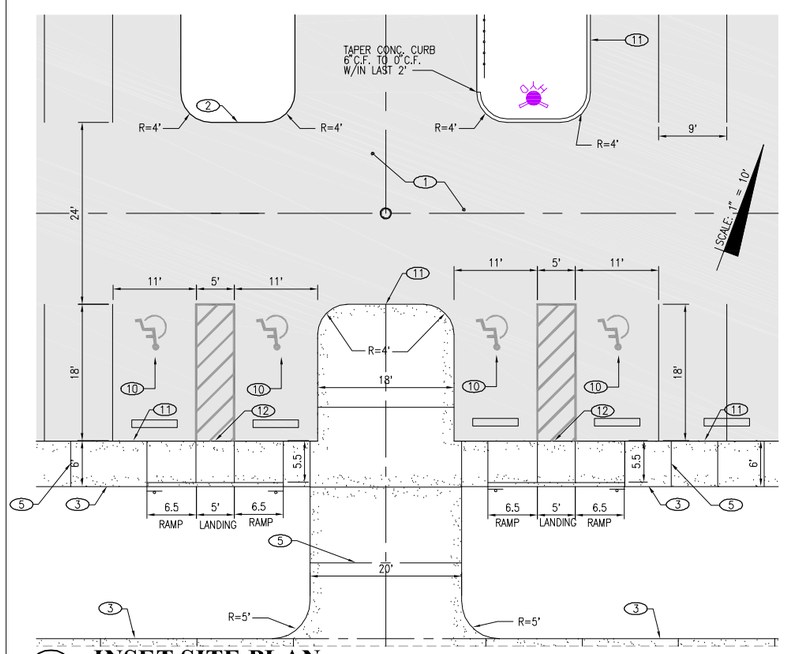

C INSET SITE PLAN

SCALE: 1" = 10' 0 10' 20'

PAV'T CONSTRUCTION NOTES

1	CONSTRUCT 2" COUNTY MIX 3 A.C. PAV'T / 4" A.B. / 6" SUB-BASE PER DET.	8/C-008
2	CONSTRUCT A.C. PAV'T EDGE PER DET.	9/C-008
3	CONSTRUCT 4" THICK CONC. WALK AND RAMP PER DET.	3/C-007
5	CONSTRUCT CRACK CONTROL JOINT PER DET.	12/C-008
6	CONSTRUCT CONC. STAIRS W/ HANDRAILS PER DET.	4/C-009 1/C-009
7	CONSTRUCT 36" HIGH HANDRAILS WITH THICKEN SLAB EDGE PER DET.	4/C-008 3/C-009
10	CONSTRUCT & STRIPE OUT ADA ACCESSIBLE STANDARD & VAN PARKING W/ SIGNS PER DET.	1/C-007 2/C-007
11	CONSTRUCT 6" CURB FACE AT A.C. PAVEMENT PER DET.	11/C-008
12	CONSTRUCT A.C. PAVEMENT FLUSH W/ CON. PER DET.	3/C-008
13	CONNECT NEW CONC. STAIRS & HANDRAILS TO EXIST. STAIRWAY PER DET.	2/C-009
14	CONSTRUCT ADA ACCESSIBLE RAMP PER DET.	1/C-008
15	INSTALL PRE-CAST CONC. WHEEL STOP PER DET.	7/C-008

FENCING CONSTRUCTION NOTES

80	CONSTRUCT 6' HIGH CHAIN LINK FENCE PER CITY & COUNTY OF HONOLULU STD. DET. FOR PARKS & RECS. CONSTRUCTION STD. DET. F-2	
81	CONSTRUCT 6' HIGH CHAIN LINK FENCE PER CITY & COUNTY OF HONOLULU STD. DET. FOR PARKS & RECS. CONSTRUCTION STD. DET. F-2	
82	CONSTRUCT 4' WIDE GATE PER CITY & COUNTY OF HONOLULU STD. DET. FOR PARKS & RECS CONSTRUCTION STD. DET. F-8 -GATE FRAME TO BE CONSTRUCTED OF 1-1/2" N.D. PIPE & INSTALL GATE STOP POST PER DETAIL	
83	CONSTRUCT DOUBLE SWING CHAIN LINK FENCE GATE PER DETAIL WIDTH OF DOUBLE SWING CHAIN LINK FENCE GATE PER PLAN	7/C-009
85	INSTALL NEW PIPE BOLLARDS SPACED 12' APART WITH WELDED RING FOR CABLE ATTACHMENT; PROVIDE ¼"ø 7x19 VINYL COATED CABLE WITH "S" HOOKS	4/C-006

LEGEND

NEW PAVEMENT AREAS

NEW CONCRETE

Engineering Partners, Inc.
Progressive Solutions
455 ELANIKAULA STREET
HILO, HAWAII, 96720
www.epintegrated.com

LEN WEN FANG LICENSED PROFESSIONAL ENGINEER Exp. 04/30/16 No. 9361-C HAWAII, U.S.A.

SIGNATURE

MARK	DATE	DESCRIPTION
1	4/10/14	MULTIPLE CHANGES TO SHEET

REVIEWED: DEPARTMENT OF PARKS AND RECREATION DATE

COUNTY OF HAWAI'I
DEPARTMENT OF PARKS & RECREATION
101 PAUAHI STREET, SUITE 6 | HILO, HAWAII 96720 | PHONE: 808.961.8311 | FAX: 808.961.8411

PAHOA PARK MASTER PLAN
PHASE I - BID SUBMITTAL 2014-02-10

JOB NO.: PR-4234 PAHOA, PUNA, HAWAII TMK: (3) 1-5-002:020

PLAN SHEET DESCRIPTION: CIVIL INSET SITE PLAN

DESIGNED BY: OH
DRAWN BY: OH
CHECKED BY: YWF

SHEET NO. C-109 OF 1 SHEETS

DATE: 2014-02-10

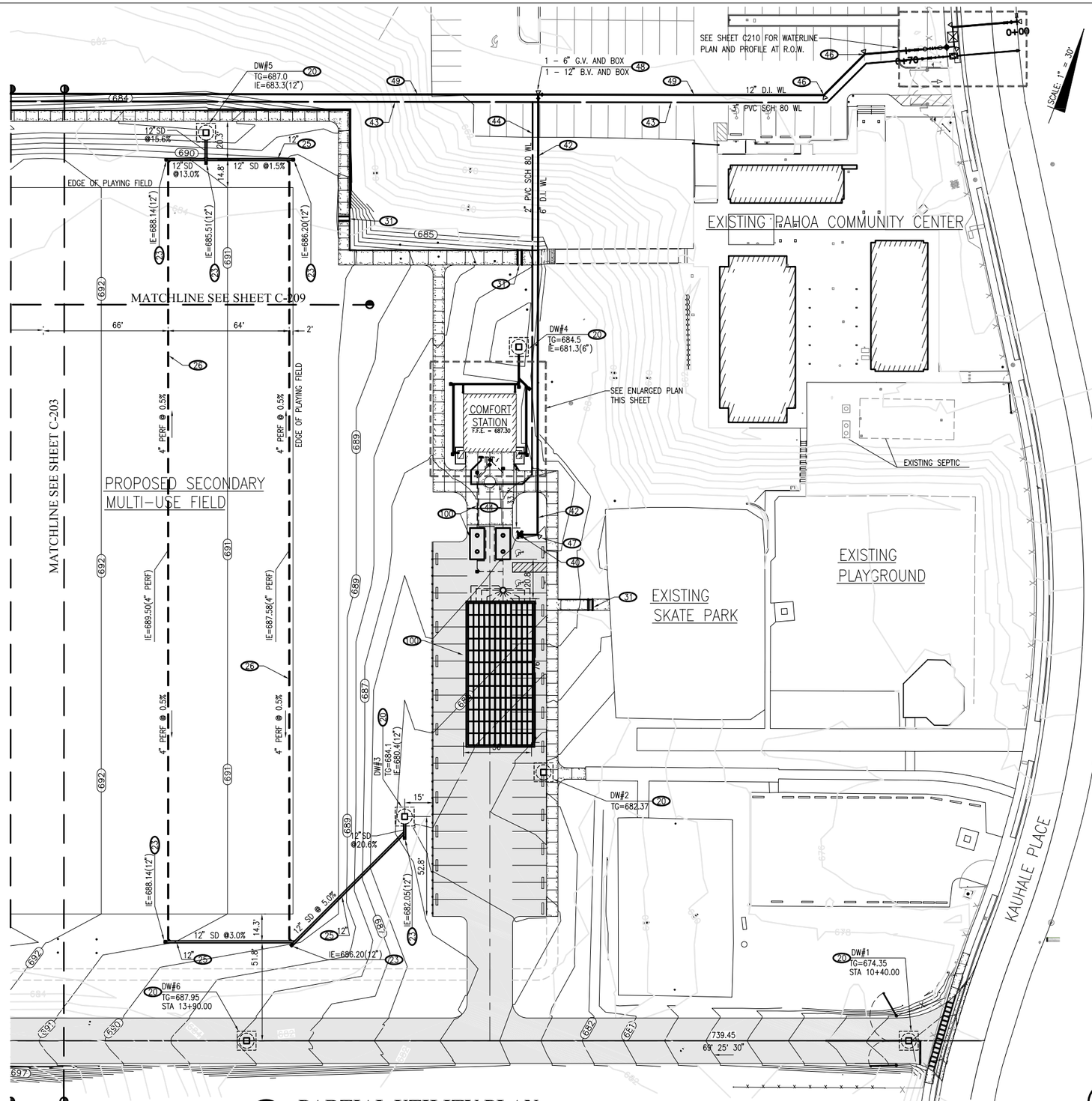

A **PARTIAL UTILITY PLAN**
SCALE: 1" = 30'

DRAINAGE KEYNOTES

20	CONSTRUCT SHALLOW 8'Ø x 7'-0" SHALLOW DRYWELL PER DET.	6/C-003
23	CONSTRUCT CLEANOUT-TO-GRADE PER DET.	7/C-004 8/C-004 ALTERNATIVE
25	CONSTRUCT PVC-SDR-35 STORM PIPE PER DET., SIZE PER PLAN	2/C-003
26	CONSTRUCT 4" PERFORATED FIELD DRAIN PER DET.	2/C-005
27	CONSTRUCT 4" DOWNSPOUT CONNECTION PER DET. DOWNSPOUT LOCATION PER ARCH. DRAWING	4/C-003
28	NOT USED	
31	CONSTRUCT SIDEWALK CULVERT PER DET.	3/C004
32	CONNECT TO ARCHITECTURAL ROCK DRYWELL CURB	

WATER KEYNOTES

40	CONSTRUCT FIRE HYDRANT PER DET.	6/C009
41	CONSTRUCT 8" DI CL 52 FIRE WATER LINE PER DET.,	1/C004
42	CONSTRUCT 6" DI CL 52 FIRE WATER LINE PER DET.,	1/C004
43	CONSTRUCT 3" PVC SCH. 80 DOMESTIC WATER LINE PER DET.,	2/C003
44	CONSTRUCT 2" PVC SCH. 80 DOMESTIC WATER LINE PER DET.,	2/C003
48	CONSTRUCT 12"X12"X6" TEE W/ CONCRETE BLOCK, PROVIDE GATE VALVE AND BOX	
53	CONNECT TO BUILDING WATER, SEE PLUMBING PLAN FOR CONTINUATION	

I.W.S. KEYNOTES

100	SEE SHEETS C208 AND C209 FOR IWS CONSTRUCTION

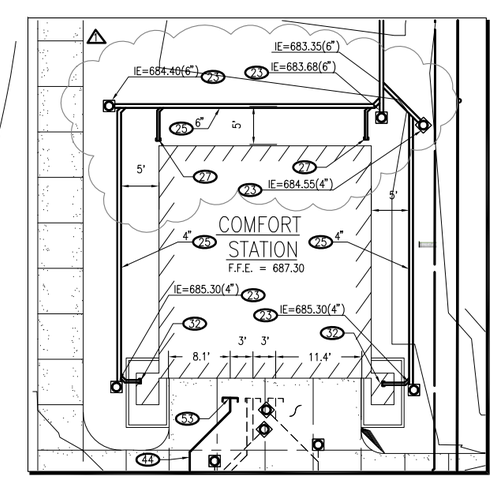

B **ENLARGED PLAN**
SCALE: 1" = 10'

Engineering Partners, Inc.
Progressive Solutions
455 ELANIKAULA STREET
HILO, HAWAII, 96720
www.epintegrated.com

YEN WEN FANG
LICENSED PROFESSIONAL ENGINEER
Exp. 04/30/16
No. 9,561-C
HAWAII, U.S.A.
SIGNATURE

MARK	DATE	DESCRIPTION
1	4/10/14	REVISE STORM PIPE LAYOUT

REVIEWED:
DEPARTMENT OF PARKS AND RECREATION — DATE

COUNTY OF HAWAII
DEPARTMENT OF PARKS & RECREATION
101 PAUAHI STREET, SUITE 6 / HILO, HAWAII 96720 / PHONE: 808.961.8311 / FAX: 808.961.8411

PAHOA PARK MASTER PLAN
PHASE I - BID SUBMITTAL 2014-02-10

JOB NO.: PR-4234
PAHOA, PUNA, HAWAII
TMK: (3) 1-5-002:020

PLAN SHEET DESCRIPTION: CIVIL PARTIAL UTILITY PLAN

DESIGNED BY: JR
DRAWN BY: JR
CHECKED BY: YWF

SHEET NO. C-202
OF SHEETS

DATE: 2014-02-10

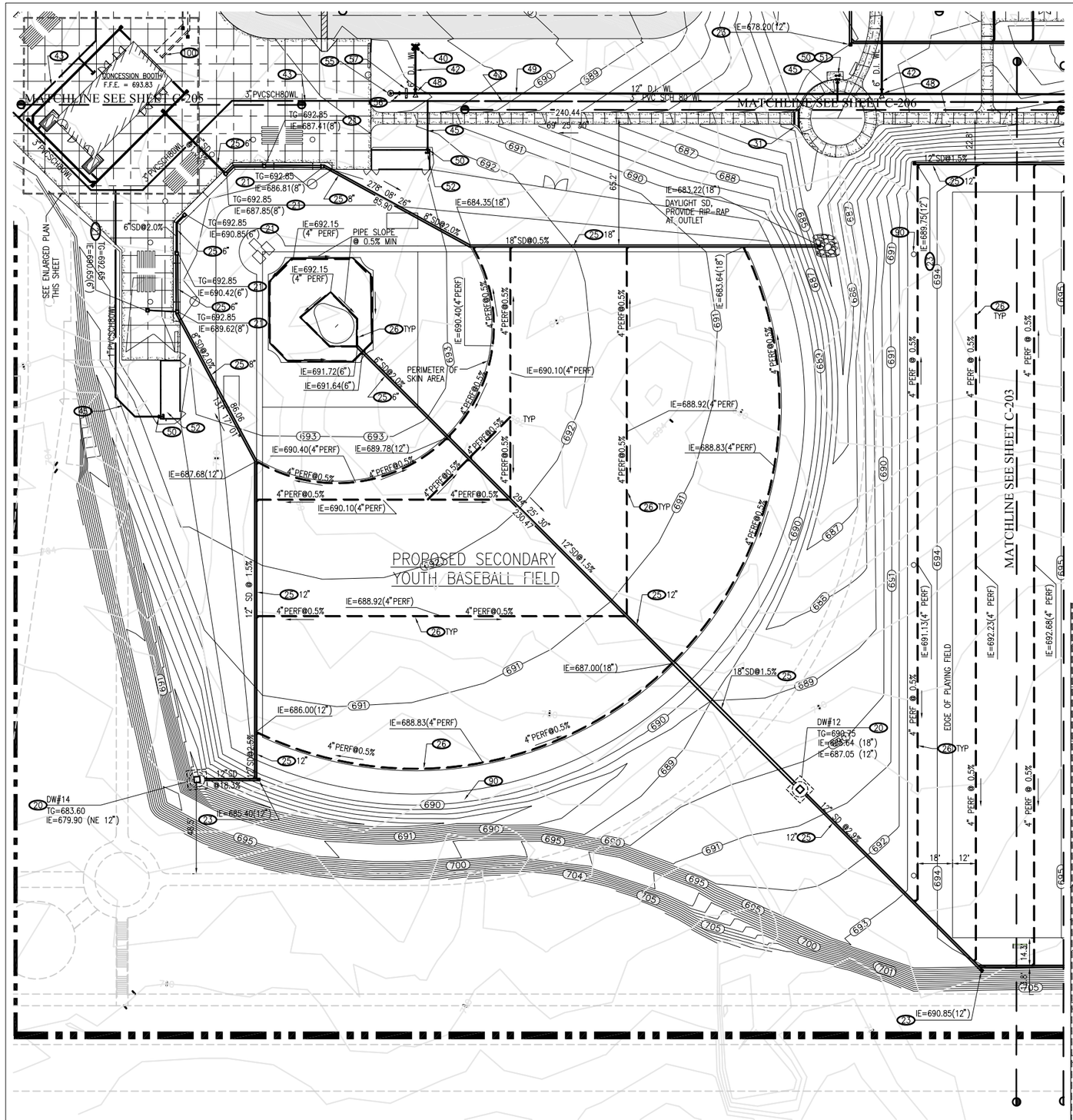

DRAINAGE KEYNOTES

20	CONSTRUCT SHALLOW 8'Ø x 7'-0" SHALLOW DRYWELL PER DET.	6/C-003
21	CONSTRUCT NON-TRAFFIC RATED GRATED YARD DRAIN PER DET.	1/C-003
23	CONSTRUCT CLEANOUT-TO-GRADE PER DET.	7/C-004 8/C-004 ALTERNATIVE
25	CONSTRUCT PVC-SDR-35 STORM PIPE PER DET., SIZE PER PLAN	2/C-003
26	CONSTRUCT 4" PERFORATED FIELD DRAIN PER DET.	2/C-004
27	CONSTRUCT 4" DOWNSPOUT CONNECTION PER DET. DOWNSPOUT LOCATION PER ARCH. DRAWING	5/C-003
31	CONSTRUCT SIDEWALK CULVERT PER DET.	3/C-004
32	CONNECT TO ARCHITECTURAL ROCK DRYWELL CURB	△

WATER KEYNOTES

40	CONSTRUCT FIRE HYDRANT PER DET.	6/C009
42	CONSTRUCT 6" DI CL 52 FIRE WATER LINE PER DET.,	1/C004
43	CONSTRUCT 3" PVC SCH. 80 DOMESTIC WATER LINE PER DET.,	2/C003
44	CONSTRUCT 2" PVC SCH. 80 DOMESTIC WATER LINE PER DET.,	2/C003
45	CONSTRUCT 1" PVC SCH. 80 DOMESTIC WATER LINE PER DET.,	2/C003
48	CONSTRUCT 12"X12"X6" TEE W/ CONCRETE BLOCK, PROVIDE 6" GATE VALVE AND BOX	
50	CONSTRUCT BALL VALVE & VALVE BOX, VALVE HANDLE TO BE STAINLESS STEEL	
52	CONSTRUCT HOSE BIBB AND SECURE TO SUPPORT POLES WHERE POSSIBLE PER PARKS & REC STD. DET. W-3	
53	CONNECT TO BUILDING WATER, SEE PLUMBING PLAN FOR CONTINUATION	
55	CONSTRUCT 2" CLEANOUT	
56	CONSTRUCT 12" BUTTERFLY VALVE AND CAP	
57	CONSTRUCT CONCRETE THRUST BEAM	

I.W.S. KEYNOTES

100	SEE SHEETS C208 AND C209 FOR IWS CONSTRUCTION

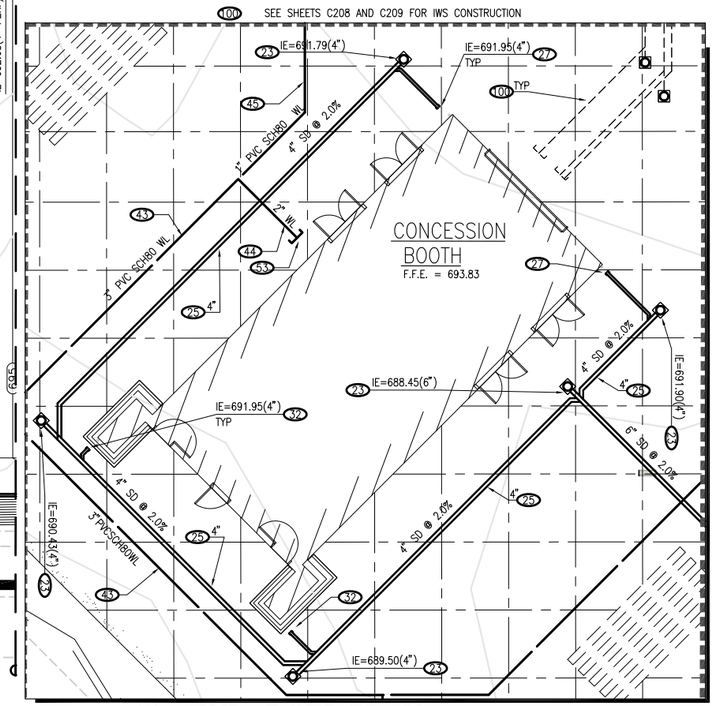

A **PARTIAL UTILITY PLAN**
SCALE: 1" = 30'

B **ENLARGED PLAN**
SCALE: 1" = 10'

Engineering Partners, Inc.
Progressive Solutions
455 ELANIKAULA STREET
HILO, HAWAII, 96720
www.epintegrated.com

LICENSED PROFESSIONAL ENGINEER, YEN WEN FANG, No. 9361-C, Exp. 04/30/16, HAWAII, U.S.A.

SIGNATURE

MARK	DATE	DESCRIPTION
1	4/10/2014	ADD KEYNOTE 32

REVIEWED: DEPARTMENT OF PARKS AND RECREATION — DATE

COUNTY OF HAWAII'I
DEPARTMENT OF PARKS & RECREATION
101 PAUAHI STREET, SUITE 6 | HILO, HAWAII 96720 | PHONE: 808.961.8311 | FAX: 808.961.8411

PAHOA PARK MASTER PLAN
PHASE I - BID SUBMITTAL 2014-02-10

JOB NO.: PR-4234 — PAHOA, PUNA, HAWAII — TMK: (3) 1-5-002:020

PLAN SHEET DESCRIPTION: CIVIL PARTIAL UTILITY PLAN

DESIGNED BY: JR
DRAWN BY: JR
CHECKED BY: YWF

SHEET NO. C-204 OF SHEETS

DATE: 2014-02-10

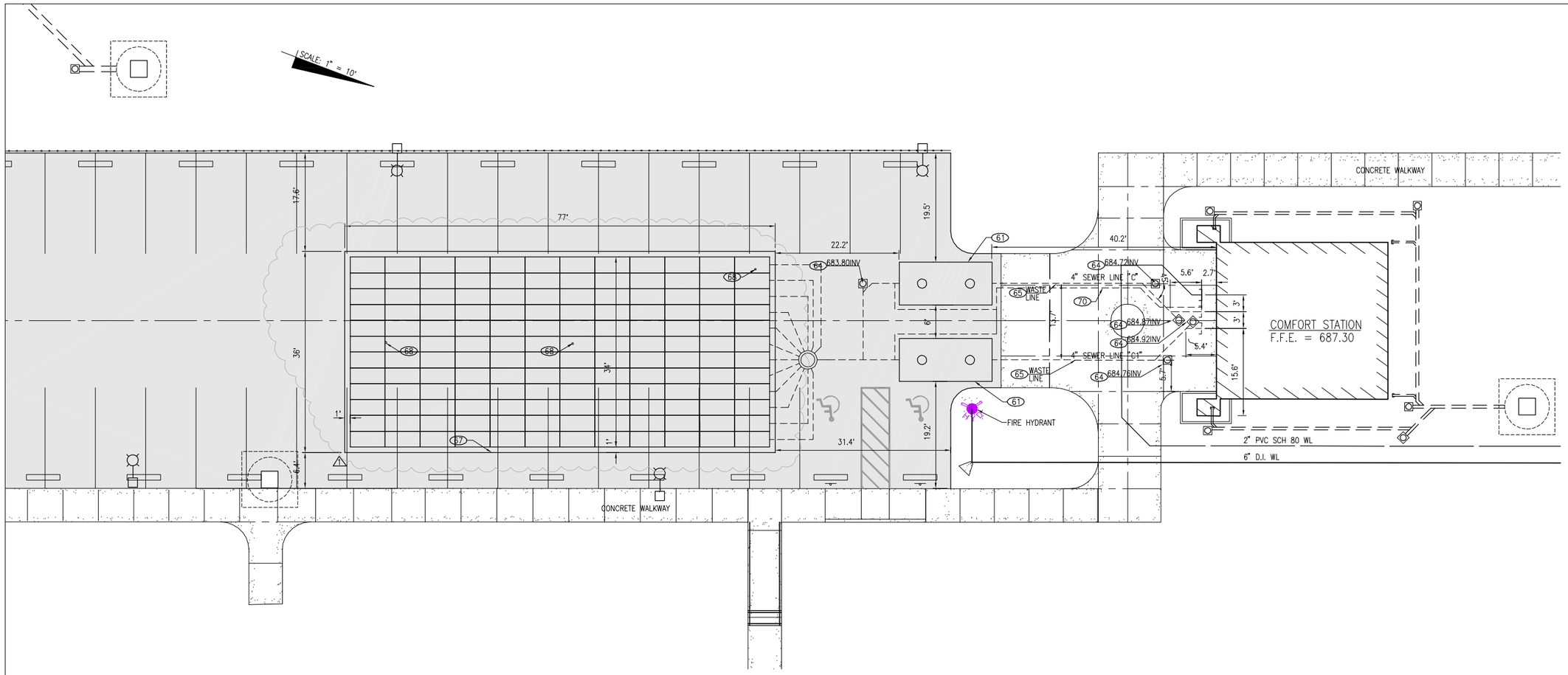

A SEWER SYSTEM-C PLAN

SCALE: 1" = 10' 0 10' 20'

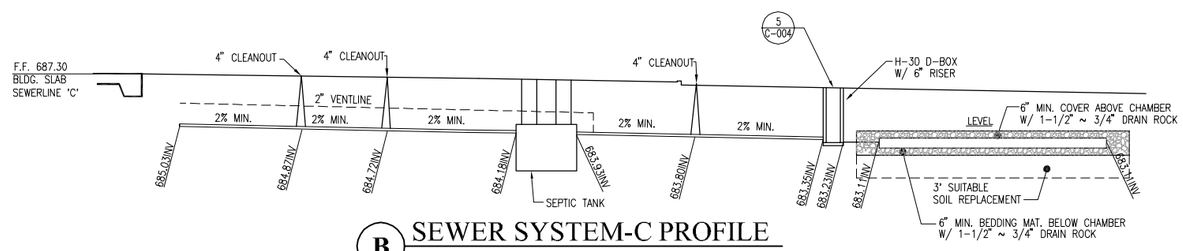

B SEWER SYSTEM-C PROFILE

SCALE: NOT TO SCALE

I.W.S. NOTES

61	CONSTRUCT 4,000 GAL SEPTIC TANK, JENSEN PRECAST MODEL NUMBER JZ4000, OR APPROVED EQUIVALENT	1/C-006
64	CONSTRUCT TRAFFIC RATED CLEAN-OUT-TO-GRADE PER DET.	6/C-004, 7/C-004
65	CONSTRUCT PVC-SDR-35 SANITARY SEWER PER DET., SIZE PER PLAN SEE PLUMBING PLANS FOR CONTINUATION AT BUILDING	2/C-003
67	CONSTRUCT TRAFFIC RATED ABSORPTION BED PER DET., SIZE PER PLAN	6/C-005
68	CONSTRUCT TRAFFIC RATED INSPECTION PORT PER DET.	4/C-005
70	CONSTRUCT 2" PVC SDR-35 VENT LINE AND CONNECT TO THE SEPTIC TANK OUTLET LINE, AND ROUTE VENT LINE TO BUILDING, VENT LINE TO BE BURIED IN SAME TRENCH WITH SEWER LINES SEE MECHANICAL DRAWINGS FOR BUILDING SEWER & VENT ROUTING	

Engineering Partners, Inc.
Progressive Solutions
455 ELANIKAULA STREET
HILO, HAWAII, 96720
www.epintegrated.com

KEN WEN FANG
LICENSED PROFESSIONAL ENGINEER
Exp. 04/30/16
No. 9361-C
HAWAII, U.S.A.

SIGNATURE

MARK	DATE	DESCRIPTION
1	4/10/14	ABSORPTION BED PVC PIPE TO INFILTRATION CHAMBERS

REVIEWED: DEPARTMENT OF PARKS AND RECREATION DATE

COUNTY OF HAWAI'I
DEPARTMENT OF PARKS & RECREATION
101 PAUAHI STREET, SUITE 6 | HILO, HAWAII 96720 | PHONE: 808.961.8311 | FAX: 808.961.8411

PAHOA PARK MASTER PLAN
PHASE I - BID SUBMITTAL 2014-02-10

JOB NO.: PR-4234 PAHOA, PUNA, HAWAII TMK: (3) 1-5-002:020

PLAN SHEET DESCRIPTION: CIVIL I.W.S. PLANS

DESIGNED BY: OH
DRAWN BY: OH
CHECKED BY: YWF

SHEET NO. C-209
OF SHEETS

DATE: 2014-02-10

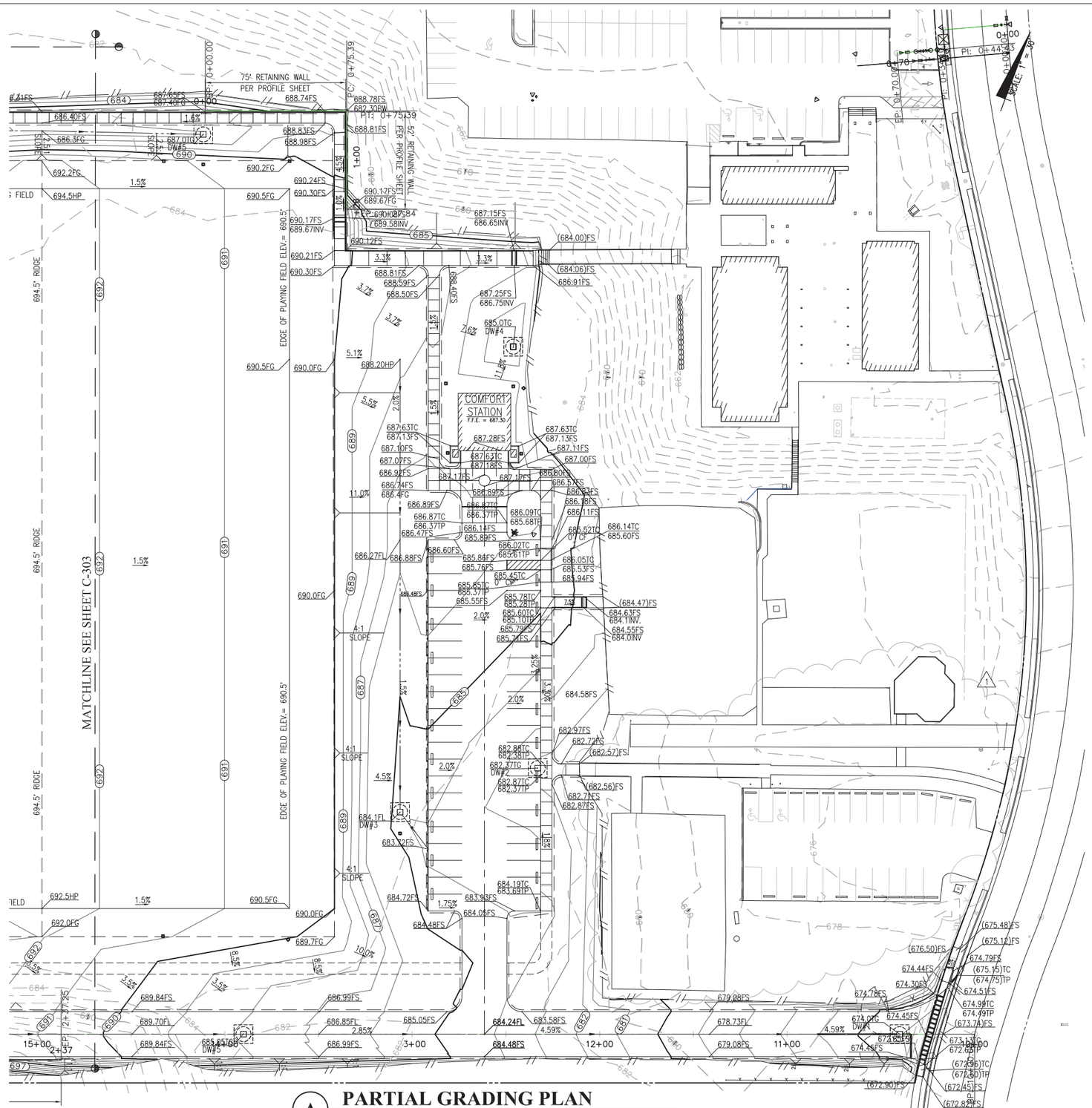

A **PARTIAL GRADING PLAN**
SCALE: 1" = 30'

SPOT ELEV. ABBREV.

BW:	BOTTOM OF WALL
FG:	FINISH GRADE
FL:	FLOW LINE
FS:	FINISH SURFACE (TOP OF FINISH AC/CONC. PAVEMENT)
HP:	HIGH POINT
TG:	TOP OF GRATE
TW:	TOP OF WALL

LEGEND:

G.R.P. GROUTED RUBBLE PAVING

NEW RETAINING WALL

0 30' 60' GRAPHIC SCALE

GRADE BREAK

SWALE LINE

100 EXISTING CONTOURS

100 NEW FINISH GRADE CONTOURS

GRADING DAYLIGHT LINE

CONSTRUCTION NOTE

1. ALL ADA ACCESS ROUTES AND PARKING STALLS SHALL HAVE A MAX CROSS SLOPE OF 1.5% AND A RUNNING SLOPE OF 4.5%
2. CONTRACTOR SHALL FOLLOW THE RECOMMENDATIONS OF THE PROJECT GEOTECHNICAL INVESTIGATION REPORT, PAHOA PARK (EXPANSION) – PHASE ONE, DATE AUGUST 25, 2013, PREPARED BY CONSTRUCTION ENGINEERING LABS.

Engineering Partners, Inc.
Progressive Solutions
455 ELANIKAULA STREET
HILO, HAWAII, 96720
www.epintegrated.com

YEN WEN FANG
LICENSED PROFESSIONAL ENGINEER
Exp. 04/30/16
No. 9361-C
HAWAII, U.S.A.

SIGNATURE

MARK	DATE	DESCRIPTION
1	2014-4-10	ADD. 3: EX. PLAYGROUND AND PARKING TO REMAIN, ADDED CONSTRUCTION NOTE 2

REVIEWED:
DEPARTMENT OF PARKS AND RECREATION — DATE

COUNTY OF HAWAII
DEPARTMENT OF PARKS & RECREATION
101 PAUAHI STREET, SUITE 6 / HILO, HAWAII 96720 / PHONE: 808.961.8311 / FAX: 808.961.8411

PAHOA PARK MASTER PLAN
PHASE I - BID SUBMITTAL 2014-02-10

JOB NO.: PR-4234 — PAHOA, PUNA, HAWAII — TMK: (3) 1-5-002:020

PLAN SHEET DESCRIPTION: CIVIL PARTIAL GRADING PLAN

DATE: 2014-02-10

DESIGNED BY: JB
DRAWN BY: JB
CHECKED BY: YWF

SHEET NO. C-302 OF SHEETS

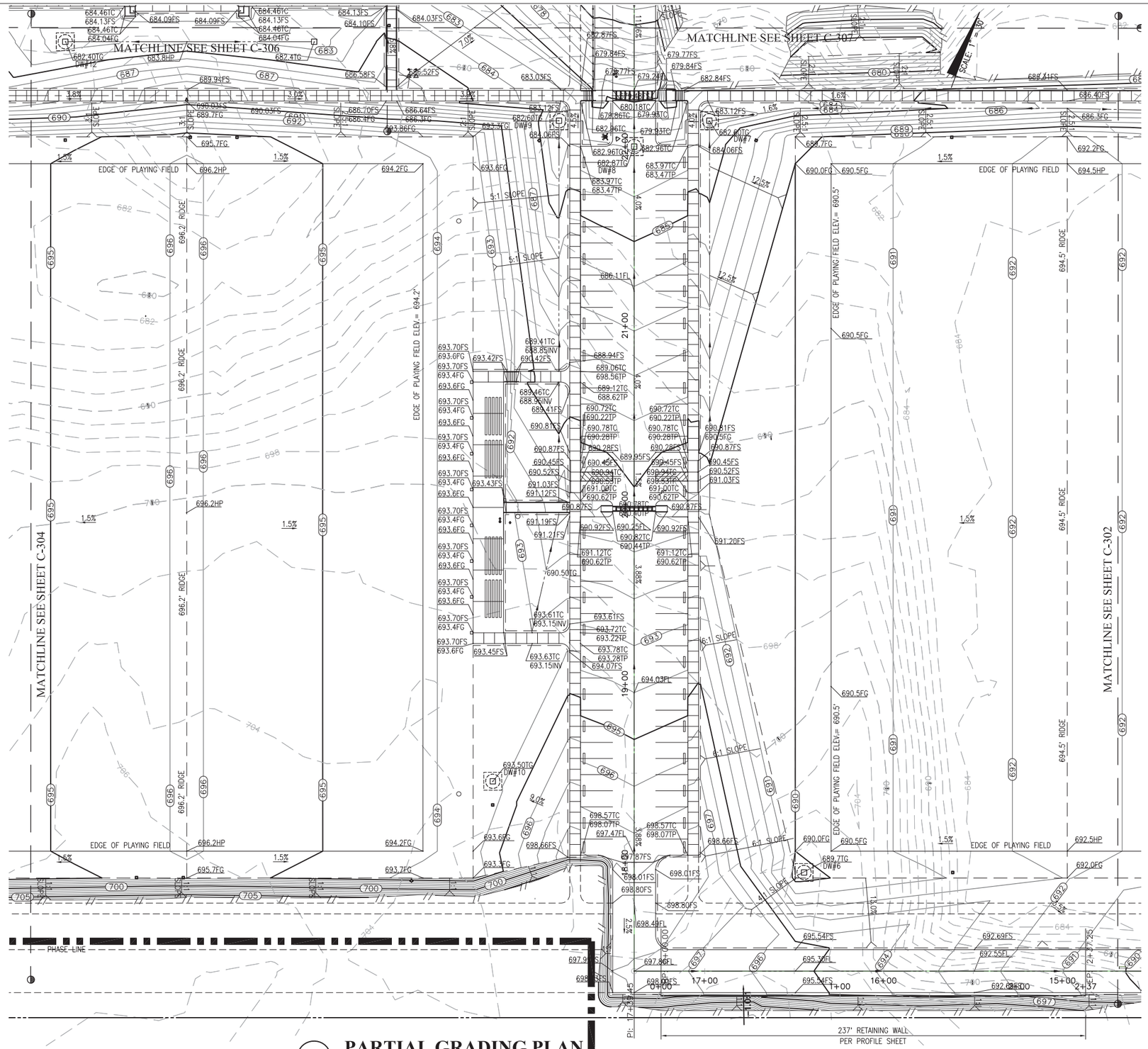

A PARTIAL GRADING PLAN

SCALE: 1" = 30'

0 30' 60'

SPOT ELEV. ABBREV.

BW:	BOTTOM OF WALL
FG:	FINISH GRADE
FL:	FLOW LINE
FS:	FINISH SURFACE (TOP OF FINISH AC/CONC. PAVEMENT)
HP:	HIGH POINT
TG:	TOP OF GRATE
TW:	TOP OF WALL

LEGEND:

G.R.P. GROUTED RUBBLE PAVING

NEW RETAINING WALL

0 30' 60'

GRAPHIC SCALE

GB — GRADE BREAK

SWALE LINE

100 — EXISTING CONTOURS

(100) — NEW FINISH GRADE CONTOURS

GRADING DAYLIGHT LINE

CONSTRUCTION NOTE

1. ALL ADA ACCESS ROUTES AND PARKING STALLS SHALL HAVE A MAX CROSS SLOPE OF 1.5% AND A RUNNING SLOPE OF 4.5%
2. CONTRACTOR SHALL FOLLOW THE RECOMMENDATIONS OF THE PROJECT GEOTECHNICAL INVESTIGATION REPORT, PAHOA PARK (EXPANSION) – PHASE ONE, DATE AUGUST 25, 2013, PREPARED BY CONSTRUCTION ENGINEERING LABS.

Engineering Partners, Inc.
Progressive Solutions
455 ELANIKAULA STREET
HILO, HAWAII, 96720
www.epintegrated.com

FENG WEN FANG
LICENSED PROFESSIONAL ENGINEER
Exp. 04/30/16
No. 9361-C
HAWAII, U.S.A.

SIGNATURE

MARK	DATE	DESCRIPTION
1	2014-4-10	ADD. 3: ADDED CONSTRUCTION NOTE 2

REVIEWED: DEPARTMENT OF PARKS AND RECREATION — DATE

COUNTY OF HAWAII
DEPARTMENT OF PARKS & RECREATION
101 PAUAHI STREET, SUITE 6 | HILO, HAWAII 96720 | PHONE: 808.961.8311 | FAX: 808.961.8411

PAHOA PARK MASTER PLAN
PHASE I - BID SUBMITTAL 2014-02-10

JOB NO.: PR-4234 — PAHOA, PUNA, HAWAII — TMK: (3) 1-5-002:020

PLAN SHEET DESCRIPTION: CIVIL PARTIAL GRADING PLAN

DATE: 2014-02-10

DESIGNED BY: JB
DRAWN BY: JB
CHECKED BY: YWF

SHEET NO. C-303 OF SHEETS

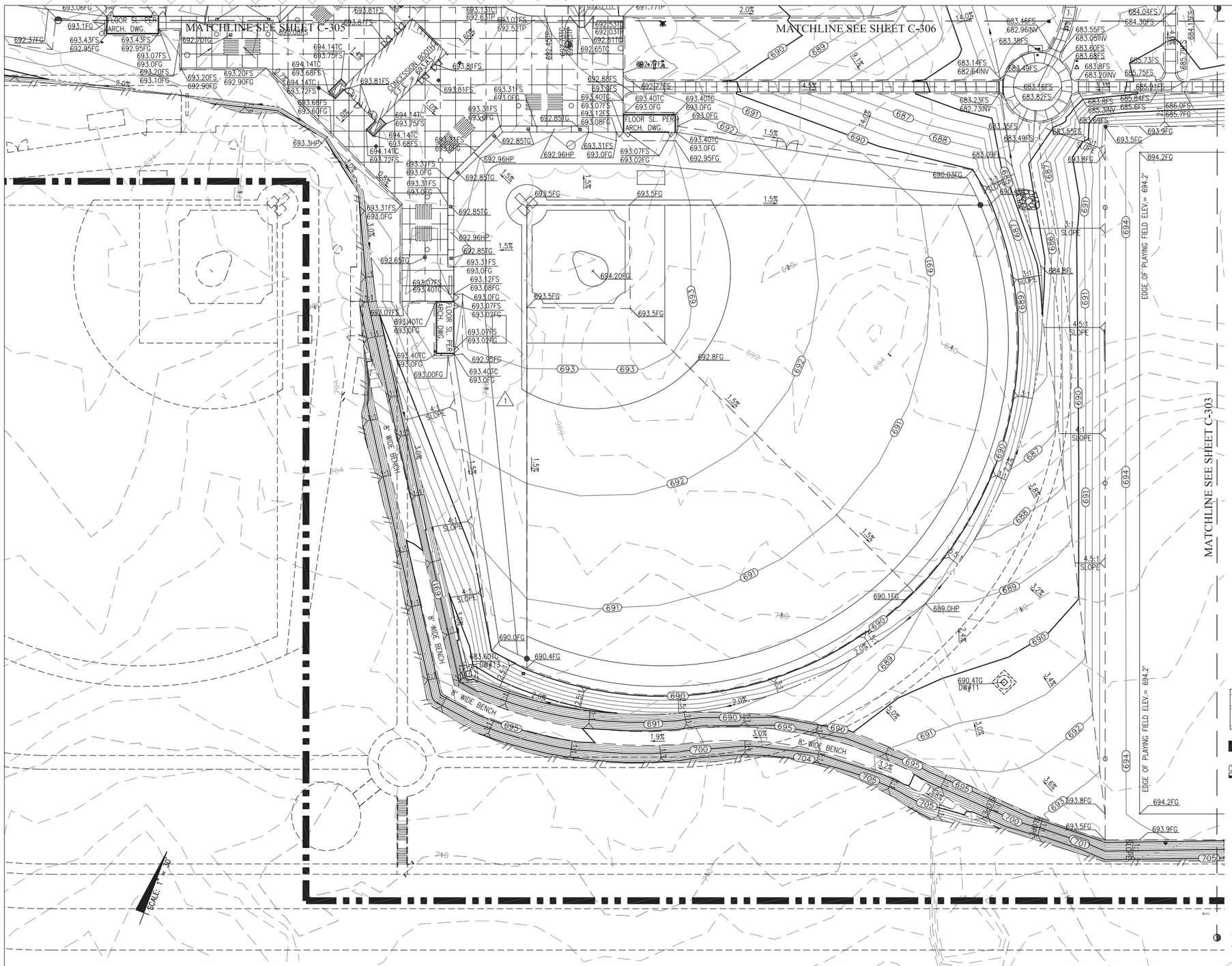

A PARTIAL GRADING PLAN

SCALE: 1" = 30'

0 30' 60'

SPOT ELEV. ABBREV.

BW:	BOTTOM OF WALL
FG:	FINISH GRADE
FL:	FLOW LINE
FS:	FINISH SURFACE (TOP OF FINISH AC/CONC. PAVEMENT)
HP:	HIGH POINT
TG:	TOP OF GRATE
TW:	TOP OF WALL

LEGEND:

- G.R.P. GROUTED RUBBLE PAVING
- NEW RETAINING WALL
- 0 30' 60' GRAPHIC SCALE
- —GB— GRADE BREAK
- SWALE LINE
- 100 EXISTING CONTOURS
- (100) NEW FINISH GRADE CONTOURS
- GRADING DAYLIGHT LINE

CONSTRUCTION NOTE

1. ALL ADA ACCESS ROUTES AND PARKING STALLS SHALL HAVE A MAX CROSS SLOPE OF 1.5% AND A RUNNING SLOPE OF 4.5%
2. CONTRACTOR SHALL FOLLOW THE RECOMMENDATIONS OF THE PROJECT GEOTECHNICAL INVESTIGATION REPORT, PAHOA PARK (EXPANSION) – PHASE ONE, DATE AUGUST 25, 2013, PREPARED BY CONSTRUCTION ENGINEERING LABS.

Engineering Partners, Inc.
Progressive Solutions
455 ELANIKAULA STREET
HILO, HAWAII, 96720
www.epintegrated.com

YEN WEN FANG
LICENSED PROFESSIONAL ENGINEER
Exp. 04/30/16
No. 9361-C
HAWAII, U.S.A.

SIGNATURE

MARK	DATE	DESCRIPTION
1	2014-4-10	ADD. 3: GRADING ADJ. AT CONCESSION AND DUGOUT, ADDED CONST. NOTE

REVIEWED: DEPARTMENT OF PARKS AND RECREATION DATE

COUNTY OF HAWAII
DEPARTMENT OF PARKS & RECREATION
101 PAUAHI STREET, SUITE 6 / HILO, HAWAII 96720 / PHONE: 808.961.8311 / FAX: 808.961.8411

PAHOA PARK MASTER PLAN
PHASE I - BID SUBMITTAL 2014-02-10

JOB NO.: PR-4234 PAHOA, PUNA, HAWAII TMK: (3) 1-5-002:020

PLAN SHEET DESCRIPTION: CIVIL PARTIAL GRADING PLAN

DESIGNED BY: JB
DRAWN BY: JB
CHECKED BY: YWF

SHEET NO. C-304 OF SHEETS

DATE: 2014-02-10

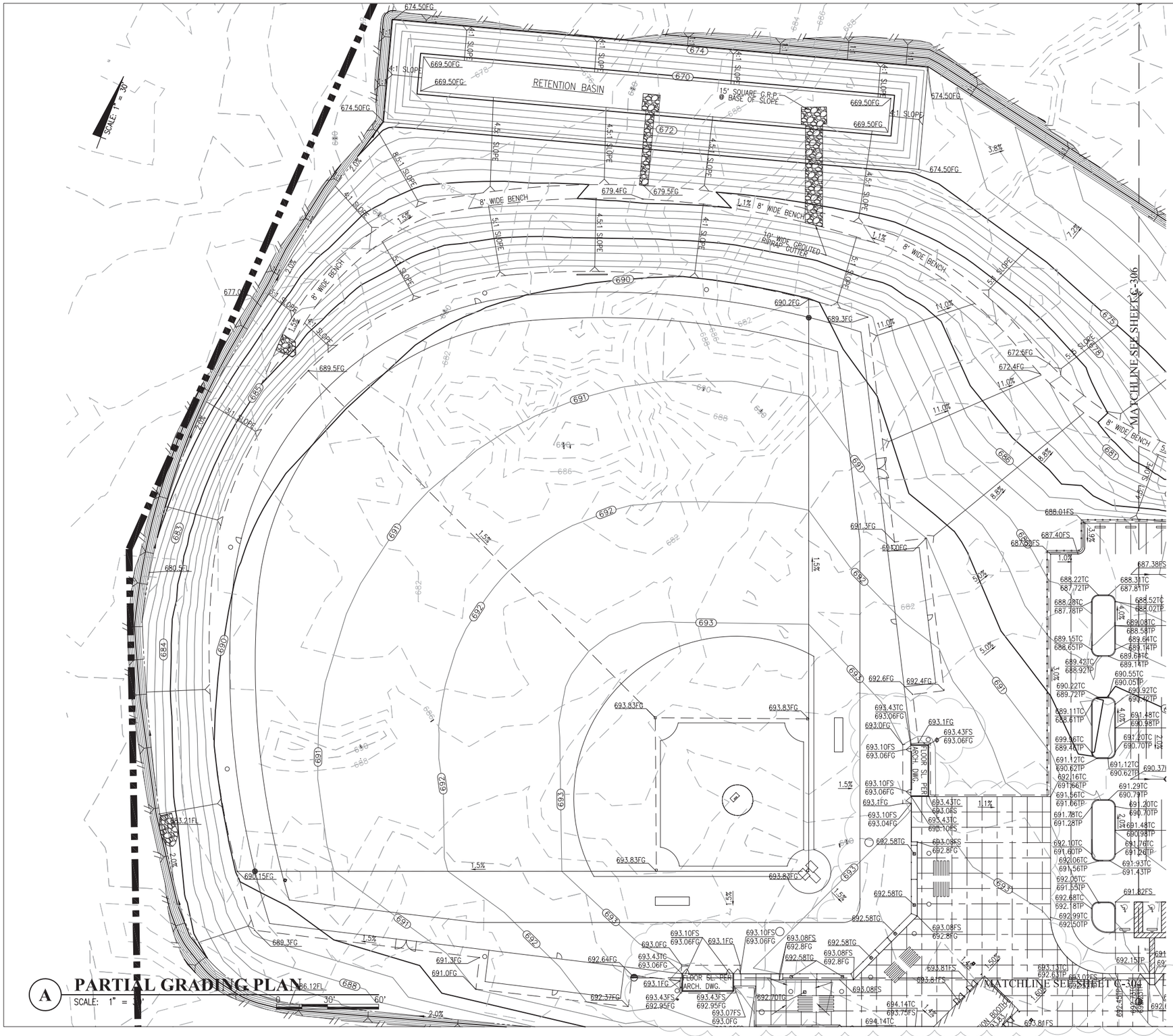

A PARTIAL GRADING PLAN

SCALE: 1" = 30'

SPOT ELEV. ABBREV.

BW:	BOTTOM OF WALL
FG:	FINISH GRADE
FL:	FLOW LINE
FS:	FINISH SURFACE (TOP OF FINISH AC/CONC. PAVEMENT)
HP:	HIGH POINT
TG:	TOP OF GRATE
TW:	TOP OF WALL

LEGEND:

- G.R.P. GROUTED RUBBLE PAVING
- NEW RETAINING WALL
- 0 30' 60' GRAPHIC SCALE
- —GB— GRADE BREAK
- SWALE LINE
- 100 EXISTING CONTOURS
- (100) NEW FINISH GRADE CONTOURS
- GRADING DAYLIGHT LINE

CONSTRUCTION NOTE

1. ALL ADA ACCESS ROUTES AND PARKING STALLS SHALL HAVE A MAX CROSS SLOPE OF 1.5% AND A RUNNING SLOPE OF 4.5%
2. CONTRACTOR SHALL FOLLOW THE RECOMMENDATIONS OF THE PROJECT GEOTECHNICAL INVESTIGATION REPORT, PAHOA PARK (EXPANSION) – PHASE ONE, DATE AUGUST 25, 2013, PREPARED BY CONSTRUCTION ENGINEERING LABS.

Engineering Partners, Inc.
Progressive Solutions
455 ELANIKAULA STREET
HILO, HAWAII, 96720
www.epintegrated.com

FENG WEN FANG
LICENSED PROFESSIONAL ENGINEER
Exp. 04/30/16
No. 9361-C
HAWAII, U.S.A.
SIGNATURE

MARK	DATE	DESCRIPTION
1	2014-4-10	ADD. 3: GRADING ADJ. AT CONCESSION AND DUGOUT, ADDED CONST. NOTE

REVIEWED: DEPARTMENT OF PARKS AND RECREATION DATE

COUNTY OF HAWAII
DEPARTMENT OF PARKS & RECREATION
101 PAUAHI STREET, SUITE 6 / HILO, HAWAII 96720 / PHONE: 808.961.8311 / FAX: 808.961.8411

PAHOA PARK MASTER PLAN
PHASE I - BID SUBMITTAL 2014-02-10

JOB NO.: PR-4234 PAHOA, PUNA, HAWAII TMK: (3) 1-5-002:020

PLAN SHEET DESCRIPTION: CIVIL PARTIAL GRADING PLAN

DESIGNED BY: JB
DRAWN BY: JB
CHECKED BY: YWF

SHEET NO. C-305 OF SHEETS

DATE: 2014-02-10

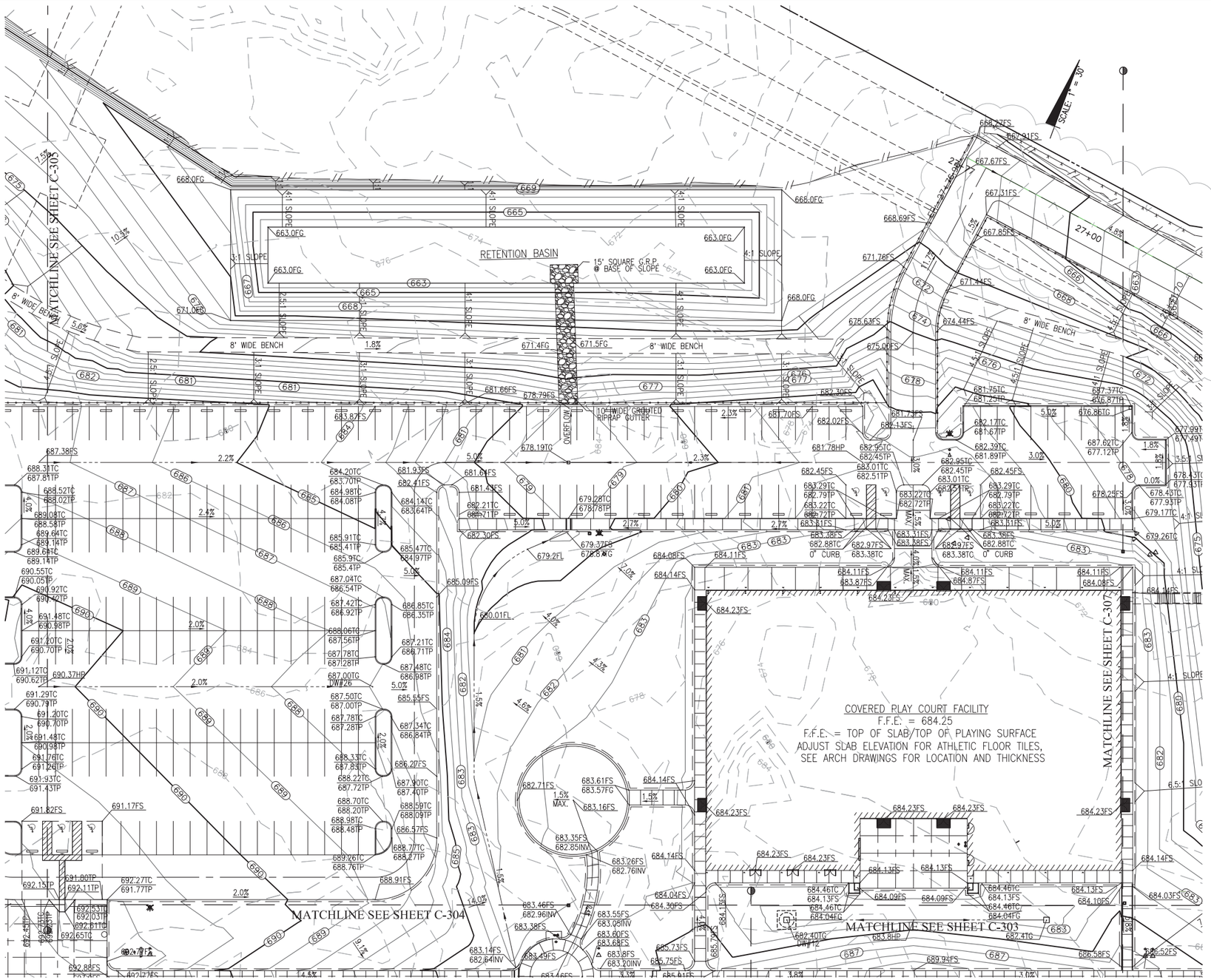

PARTIAL GRADING PLAN

A

SCALE: 1" = 30'

0 30' 60'

SPOT ELEV. ABBREV.

BW:	BOTTOM OF WALL
FG:	FINISH GRADE
FL:	FLOW LINE
FS:	FINISH SURFACE (TOP OF FINISH AC/CONC. PAVEMENT)
HP:	HIGH POINT
TG:	TOP OF GRATE
TW:	TOP OF WALL

LEGEND:

G.R.P. GROUTED RUBBLE PAVING

NEW RETAINING WALL

0 30' 60' GRAPHIC SCALE

GB GRADE BREAK

SWALE LINE

100 EXISTING CONTOURS

100 NEW FINISH GRADE CONTOURS

GRADING DAYLIGHT LINE

CONSTRUCTION NOTE

1. ALL ADA ACCESS ROUTES AND PARKING STALLS SHALL HAVE A MAX CROSS SLOPE OF 1.5% AND A RUNNING SLOPE OF 4.5%
2. CONTRACTOR SHALL FOLLOW THE RECOMMENDATIONS OF THE PROJECT GEOTECHNICAL INVESTIGATION REPORT, PAHOA PARK (EXPANSION) – PHASE ONE, DATE AUGUST 25, 2013, PREPARED BY CONSTRUCTION ENGINEERING LABS.

Engineering Partners, Inc.
Progressive Solutions
455 ELANIKAULA STREET
HILO, HAWAII, 96720
www.epintegrated.com

FENG WEN FANG
LICENSED PROFESSIONAL ENGINEER
Exp. 04/30/16
No. 9361-C
HAWAII, U.S.A.

SIGNATURE

MARK	DATE	DESCRIPTION
1	2014-4-10	ADD. 3: GRADING ADJUSTMENTS ROADWAY, ADDED CONSTRUCTION NOTE 2

REVIEWED: DATE

DEPARTMENT OF PARKS AND RECREATION

COUNTY OF HAWAII
DEPARTMENT OF PARKS & RECREATION
101 PAUAHI STREET, SUITE 6 / HILO, HAWAII 96720 / PHONE: 808.961.8311 / FAX: 808.961.8411

PAHOA PARK MASTER PLAN
PHASE I - BID SUBMITTAL 2014-02-10

JOB NO.: PR-4234 PAHOA, PUNA, HAWAII TMK: (3) 1-5-002:020

PLAN SHEET DESCRIPTION: CIVIL PARTIAL GRADING PLAN

DATE: 2014-02-10

DESIGNED BY: JB
DRAWN BY: JB
CHECKED BY: YWF

SHEET NO. C-306 OF SHEETS

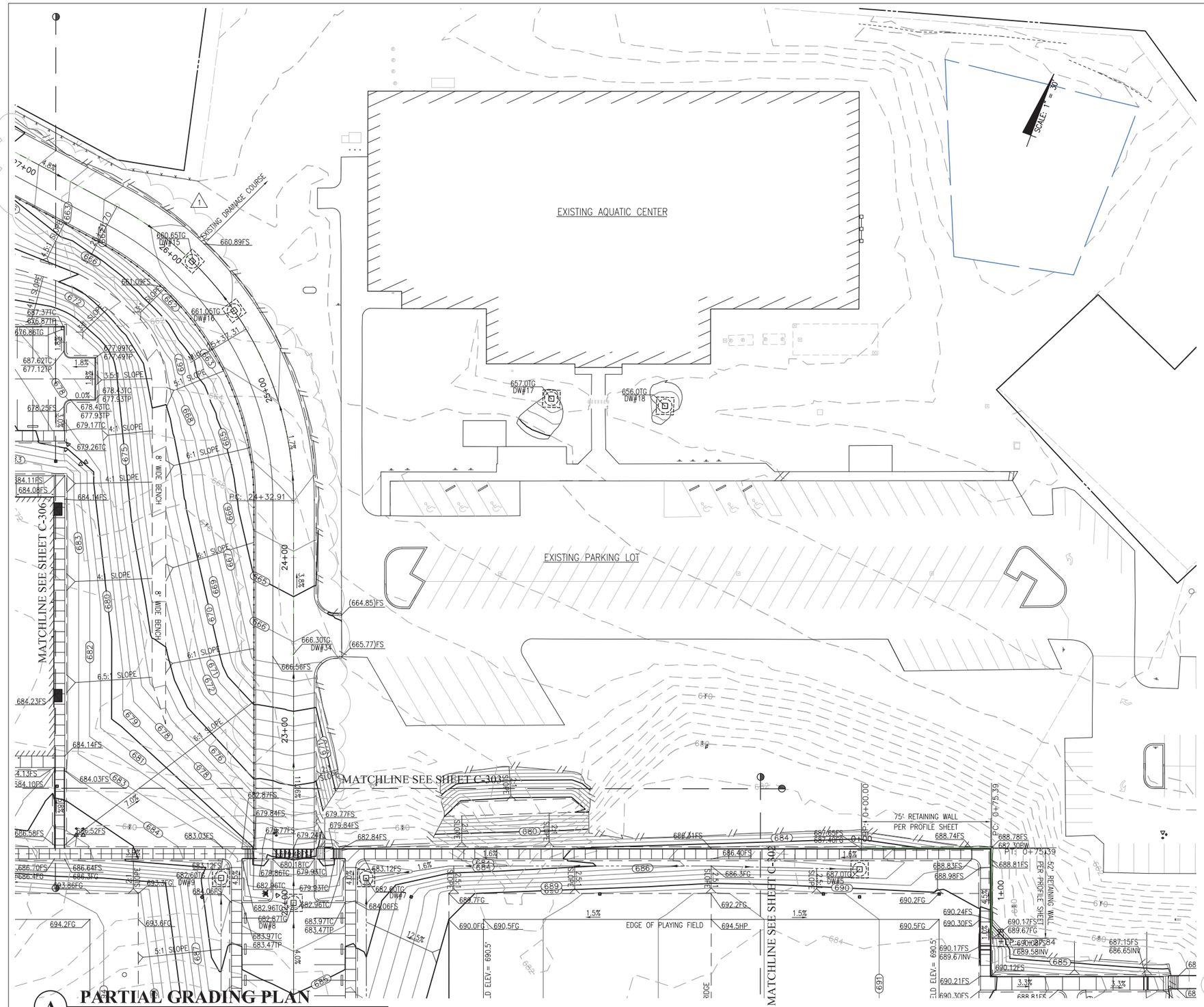

A **PARTIAL GRADING PLAN**
SCALE: 1" = 30'

SPOT ELEV. ABBREV.

BW:	BOTTOM OF WALL
FG:	FINISH GRADE
FL:	FLOW LINE
FS:	FINISH SURFACE (TOP OF FINISH AC/CONC. PAVEMENT)
HP:	HIGH POINT
TG:	TOP OF GRATE
TW:	TOP OF WALL

LEGEND:

- G.R.P. GROUTED RUBBLE PAVING
- NEW RETAINING WALL
- GRAPHIC SCALE (0, 30', 60')
- GRADE BREAK
- SWALE LINE
- EXISTING CONTOURS
- NEW FINISH GRADE CONTOURS
- GRADING DAYLIGHT LINE

CONSTRUCTION NOTE

1. ALL ADA ACCESS ROUTES AND PARKING STALLS SHALL HAVE A MAX CROSS SLOPE OF 1.5% AND A RUNNING SLOPE OF 4.5%
2. CONTRACTOR SHALL FOLLOW THE RECOMMENDATIONS OF THE PROJECT GEOTECHNICAL INVESTIGATION REPORT, PAHOA PARK (EXPANSION) – PHASE ONE, DATE AUGUST 25, 2013, PREPARED BY CONSTRUCTION ENGINEERING LABS.

Engineering Partners, Inc.
Progressive Solutions
455 ELANIKAULA STREET
HILO, HAWAII, 96720
www.epintegrated.com

YEN WEN FANG
LICENSED PROFESSIONAL ENGINEER
Exp. 04/30/16
No. 9361-C
HAWAII, U.S.A.
SIGNATURE

MARK	DATE	DESCRIPTION
1	2014-4-10	ADD. 3: GRADING ADJUSTMENTS AT ROADWAY, ADDED CONSTRUCTION NOTE 2

REVIEWED:
DEPARTMENT OF PARKS AND RECREATION — DATE

COUNTY OF HAWAI'I
DEPARTMENT OF PARKS & RECREATION
101 PAUAHI STREET, SUITE 6 / HILO, HAWAII 96720 / PHONE: 808-961-8311 / FAX: 808-961-8411

PAHOA PARK MASTER PLAN
PHASE I - BID SUBMITTAL 2014-02-10

JOB NO.: PR-4234 — PAHOA, PUNA, HAWAII — TMK: (3) 1-5-002:020

PLAN SHEET DESCRIPTION: CIVIL PARTIAL GRADING PLAN

DATE: 2014-02-10

SHEET NO. C-307 OF SHEETS

DESIGNED BY: JB
DRAWN BY: JB
CHECKED BY: YWF