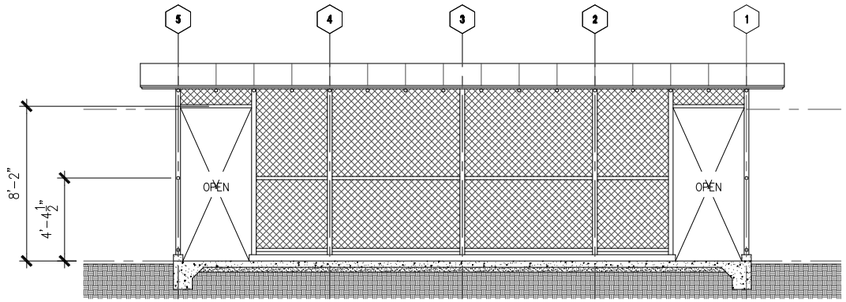

BUILDING SECTION - LONGITUDINAL (C3)
1" = 4'

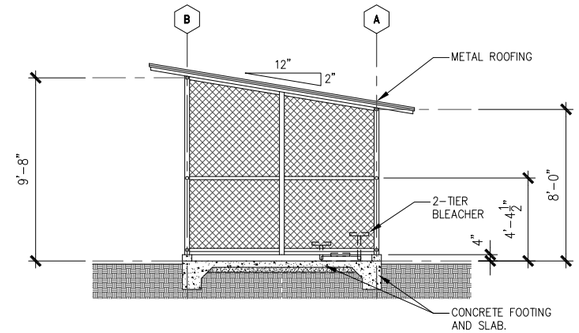

BUILDING SECTION - TRANSVERSE (C2)
1" = 4'

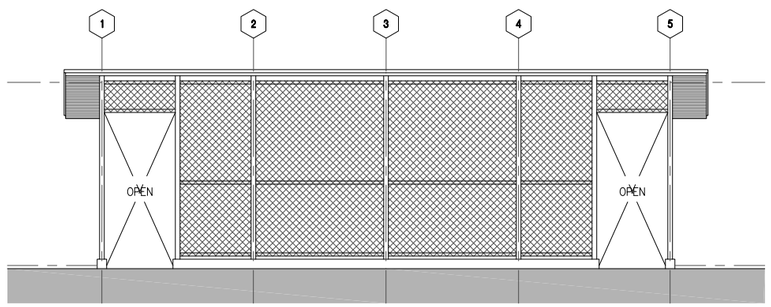

BUILDING ELEVATION - FRONT (B3)
1" = 4'

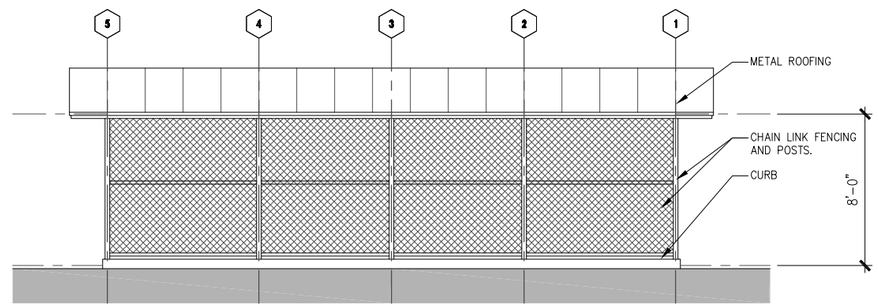

BUILDING ELEVATION - REAR (B2)
1" = 4'

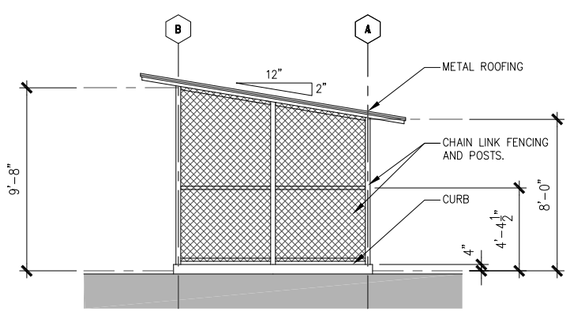

BUILDING ELEVATION - SIDE (A4)
1" = 4'

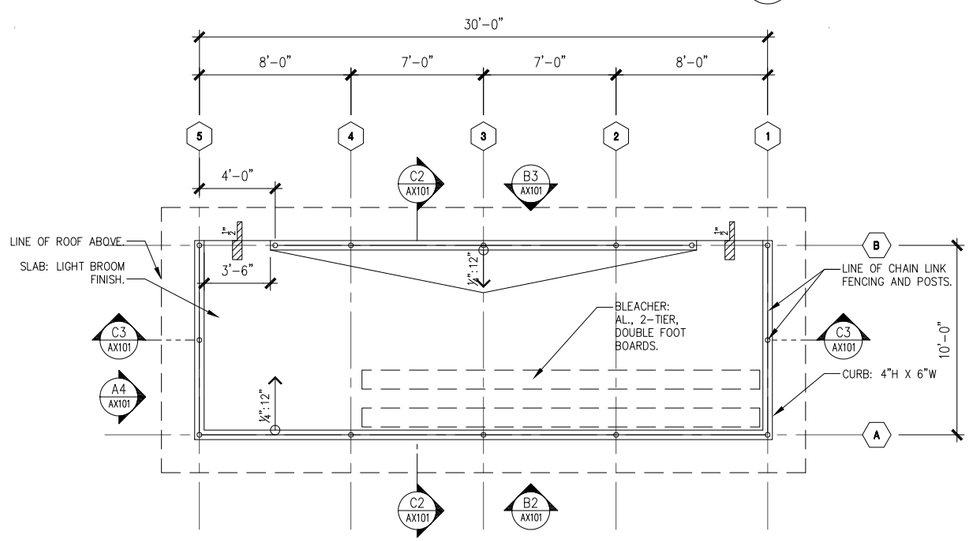

FLOOR PLAN - DUGOUT (A2)
1" = 4'

NOTES - FLOOR PLAN

1. REFER TO SHEET G-401 FOR MOUNTING HEIGHTS OF FIXTURES AND GRAB BARS.
2. STUD WALLS: GYP. BD. OVER LIGHT GAGE METAL; PAINT FINISH.
3. REFER TO INTERIOR ELEVATIONS FOR FINISH EXTENTS.
4. REFER TO RCP FOR CEILING FINISH EXTENTS.
5. REFER TO G-001 FOR FINISH LEGEND
6. CONCRETE CURB
7. METAL GUTTER AND DOWNSPOUT PAINTED TO MATCH MP-1
8. DRYWELL W/ CRUSHED BLACK LAVA STONE MULCH
9. LINE OF SOFFIT ABOVE
10. LOCATION OF CMU-3 ABOVE
11. LOCKABLE MOTORIZED OVERHEAD COILING DOOR
12. SST COUNTER
13. FOLDING WORK TABLE
14. SST SCULLERY SINK
15. LINE OF BEAM ABOVE
16. HI-LO DRINKING FOUNTAIN
17. LINE OF HEADER ABOVE
18. MP-1 PERFORATED SOFFIT VENT TRIM AT PERIMETER, TYP ALL SIDES
19. RECESSED SST WALK-OFF GRILLE

LEGEND

- NEW STUD WALL
- NEW CMU WALL
- *101 A — DOOR TYPES: REFER TO A-500 SERIES DRAWINGS.
- *101A — WINDOW TYPES: REFER TO A-500 SERIES DRAWINGS.
- *101A — LOUVER TYPES: REFER TO A-500 SERIES DRAWINGS.
- 1 — WALL TYPES: REFER TO A-500 SERIES DRAWINGS.
- 1 — KEY NOTE
- MP-1 — FINISH TYPE: REFER TO G-001 FOR FINISH SCHEDULE
- SD — SMOKE DETECTOR UL APPROVED
- DIRECTIONAL, RECESSED CAN LIGHT
- RECESSED CAN LIGHT
- SURFACE MOUNTED LIGHT
- F — JUNCTION BOX FOR CEILING FAN
- SURFACE MOUNTED FLUORESCENT LIGHT
- PENDENT LIGHT
- GYPSUM BOARD CEILING
- 24X48 SUSPENDED ACOUSTICAL TILES.

WCITARCHITECTURE
726 KAPIOLANI BOULEVARD, SUITE C-400
HONOLULU, HAWAII 96813
PHONE (808) 592-2345
www.wcitarch.com
wci@wcitarch.com

ROBERT K. IOPA LICENSED PROFESSIONAL ARCHITECT No.6890 HAWAII, U.S.A.

Robert Iopa, AIA — Exp. Date 04/30/2014

THE WORK WAS PREPARED BY ME OR UNDER MY SUPERVISION AND CONSTRUCTION OF THE PROJECT WILL BE SUPERVISED BY ME OR UNDER MY CONTROL.

NOTE: CONTRACTOR SHALL CHECK AND VERIFY ALL DIMENSIONS AT JOB SITE BEFORE PROCEEDING WITH WORK.

MARK	DATE	DESCRIPTION

REVIEWED: DEPARTMENT OF PARKS AND RECREATION — DATE

COUNTY OF HAWAI'I
DEPARTMENT OF PARKS & RECREATION
101 PAUAHI STREET, SUITE 6 / HILO, HAWAII 96720 / PHONE: 808.961.8311 / FAX: 808.961.8411

PAHOA PARK MASTER PLAN
PHASE I - BID SUBMITTAL 2014-02-10

JOB NO.: PR-4234 — PAHOA, PUNA, HAWAII — TMK: (3) 1-5-002:020

PLAN SHEET DESCRIPTION: SANITARY BUILDINGS - DUGOUT- FLOOR PLAN, BUILDING ELEVS AND SECTS

DESIGNED BY: OF
DRAWN BY: OF
CHECKED BY: SC

SHEET NO. AX101

OF #### SHEETS

DATE: 2014-02-10

PRINT DATE: 14 April 2014

DOOR NUMBER	ROOM NAME	DOOR TYPE	DOOR WIDTH	DOOR HEIGHT	DOOR THICKNESS	DOOR FRAME OPNG	DOOR MATERIAL	DOOR FINISH	DOOR TRANSOM SIDE PANEL	FRAME MATERIAL	FRAME FINISH	DETAILS HEAD	DETAILS JAMB	DETAILS SILL	DETAILS TRANSOM	DETAILS ASTRAGAL	HARDWARE GROUP	NOTES
PLAYCOURT																		
PC A	PLAY COURT AREA	A	6'-0"	7'-0"	1-3/4"	6'-4"X7'-4"	GALV. STEEL	PAINT	–	GALV. STEEL	PAINT	C1/A504	C1/A504	B1/A504	–	–	01	–
PC B	PLAY COURT AREA	A	6'-0"	7'-0"	1-3/4"	6'-4"X7'-4"	GALV. STEEL	PAINT	–	GALV. STEEL	PAINT	C1/A504	C1/A504	B1/A504	–	–	02	–
PC C	PLAY COURT AREA	A	6'-0"	7'-0"	1-3/4"	6'-4"X7'-4"	GALV. STEEL	PAINT	–	GALV. STEEL	PAINT	C1/A504	C1/A504	B1/A504	–	–	01	–
PC D	PLAY COURT AREA	A	6'-0"	7'-0"	1-3/4"	6'-4"X7'-4"	GALV. STEEL	PAINT	–	GALV. STEEL	PAINT	C1/A504	C1/A504	B1/A504	–	–	02	–
PC E	PLAY COURT AREA	A	6'-0"	7'-0"	1-3/4"	6'-4"X7'-4"	GALV. STEEL	PAINT	–	GALV. STEEL	PAINT	C1/A504	C1/A504	B1/A504	–	–	02	–
PC F	PLAY COURT AREA	A	6'-0"	7'-0"	1-3/4"	6'-4"X7'-4"	GALV. STEEL	PAINT	–	GALV. STEEL	PAINT	C1/A504	C1/A504	B1/A504	–	–	01	–
PC G	PLAY COURT AREA	A	6'-0"	7'-0"	1-3/4"	6'-4"X7'-4"	GALV. STEEL	PAINT	–	GALV. STEEL	PAINT	C1/A504	C1/A504	B1/A504	–	–	01	–
PC H	PLAY COURT AREA	A	6'-0"	7'-0"	1-3/4"	6'-4"X7'-4"	GALV. STEEL	PAINT	–	GALV. STEEL	PAINT	C1/A504	C1/A504	B1/A504	–	–	02	–
PCRR A	RESTROOM – WOMEN	F	3'-0"	7'-0"	–	3'-4"X10'-4"	GALV. STEEL	PAINT	–	GALV. STEEL	PAINT	C3/A503	B3/A503	A3/A503	–	–	05	DEC. GATE
PCRR B	PLUMBING CHASE	G	3'-0"	7'-0"	1-3/4"	3'-4"X7'-4"	GALV. STEEL	PAINT	–	GALV. STEEL	PAINT	C1/A503	B1/A503	A1/A503	–	–	06	–
PCRR C	JANITOR	G	3'-0"	7'-0"	1-3/4"	3'-4"X7'-4"	GALV. STEEL	PAINT	–	GALV. STEEL	PAINT	C1/A503	B1/A503	A1/A503	–	–	06	–
PCRR D	RESTROOM – MEN	F	3'-0"	7'-0"	–	3'-4"X10'-4"	GALV. STEEL	PAINT	–	GALV. STEEL	PAINT	C3/A503	B3/A503	A3/A503	–	–	05	DEC. GATE
PCEL A	ELECTRICAL ROOM	D	3'-0"	7'-0"	1-3/4"	3'-4"X7'-4"	GALV. STEEL	PAINT	–	GALV. STEEL	PAINT	C1/A503	B1/A503	A1/A503	–	–	07	–
PCCP A	CONCESSION PREP AREA	B	6'-0"	7'-0"	1-3/4"	6'-4"X7'-4"	GALV. STEEL	PAINT	–	GALV. STEEL	PAINT	C1/A503	B1/A503	A1/A503	–	–	08	–
PCOF A	OFFICE	D	3'-0"	7'-0"	1-3/4"	6'-4"X7'-4"	GALV. STEEL	PAINT	–	GALV. STEEL	PAINT	C1/A503	B1/A503	A1/A503	–	–	03	–
PCOF B	OFFICE	D	3'-0"	7'-0"	1-3/4"	6'-4"X7'-4"	GALV. STEEL	PAINT	–	GALV. STEEL	PAINT	C1/A503	B1,B4/A503	A1/A503	–	–	06	–
PCOF C	OFFICE – CLOSET	C	5'-0"	7'-0"	1-3/4"	6'-4"X7'-4"	WOOD	PAINT	–	GALV. STEEL	PAINT	C1/A503	B1/A503	A1/A503	–	–	09	–
PCOF D	OFFICE – CLOSET	C	5'-0"	7'-0"	1-3/4"	6'-4"X7'-4"	WOOD	PAINT	–	GALV. STEEL	PAINT	C1/A503	B1/A503	A1/A503	–	–	09	–
PCST1 A	STORAGE ROOM 1	B	6'-0"	7'-0"	1-3/4"	6'-4"X7'-4"	GALV. STEEL	PAINT	–	GALV. STEEL	PAINT	C1/A503	B1/A503	A1/A503	–	–	08	–
PCST2 A	STORAGE ROOM 2	B	6'-0"	7'-0"	1-3/4"	6'-4"X7'-4"	GALV. STEEL	PAINT	–	GALV. STEEL	PAINT	C1/A503	B1/A503	A1/A503	–	–	09	–
PCST3 A	STORAGE ROOM 3	B	6'-0"	7'-0"	1-3/4"	6'-4"X7'-4"	GALV. STEEL	PAINT	–	GALV. STEEL	PAINT	C1/A503	B1/A503	A1/A503	–	–	08	–
PCST4 A	STORAGE ROOM 4	B	6'-0"	7'-0"	1-3/4"	6'-4"X7'-4"	GALV. STEEL	PAINT	–	GALV. STEEL	PAINT	C1/A503	B1/A503	A1/A503	–	–	09	–
PCST5 A	STORAGE ROOM 5	B	6'-0"	7'-0"	1-3/4"	6'-4"X7'-4"	GALV. STEEL	PAINT	–	GALV. STEEL	PAINT	C1/A503	B1/A503	A1/A503	–	–	08	–
PCST6 A	STORAGE ROOM 6	E	16'-0"	7'-0"	–	–	GALV. STEEL	FF	–	GALV. STEEL	PAINT	C2/A503	B2/A503	A2/A503	–	–	10	–
PCST6 B	STORAGE ROOM 6	E	16'-0"	7'-0"	–	–	GALV. STEEL	FF	–	GALV. STEEL	PAINT	C2/A503	B2/A503	A2/A503	–	–	10	–
PCST6 C	STORAGE ROOM 6	D	3'-0"	7'-0"	1-3/4"	6'-4"X7'-4"	GALV. STEEL	PAINT	–	GALV. STEEL	PAINT	C1/A503	B1/A503	A1/A503	–	–	03	–
PCFSC A	FIRE SPRINKLER RISER CLOSET	D	3'-0"	7'-0"	1-3/4"	6'-4"X7'-4"	GALV. STEEL	PAINT	–	GALV. STEEL	PAINT	C1/A503	B1/A503	A1/A503	–	–	03	–
																	1	
CONCESSION BOOTH																		
CBCP A	CONCESSION AND PREP	B	6'-0"	7'-0"	1-3/4"	6'-4"X7'-4"	GALV. STEEL	PAINT	–	GALV. STEEL	PAINT	C1/A503	B1/A503	A1/A503	–	–	08	–
CBCP B	CONCESSION AND PREP	B	6'-0"	7'-0"	1-3/4"	6'-4"X7'-4"	GALV. STEEL	PAINT	–	GALV. STEEL	PAINT	C1/A503	B1/A503	A1/A503	–	–	08	–
CBJS A	JANITOR/STORAGE	B	6'-0"	7'-0"	1-3/4"	3'-4"X7'-4"	GALV. STEEL	PAINT	–	GALV. STEEL	PAINT	C1/A503	B1/A503	A1/A503	–	–	08	–
CBJS B	JANITOR/STORAGE	G	3'-0"	7'-0"	1-3/4"	3'-4"X7'-4"	GALV. STEEL	PAINT	–	GALV. STEEL	PAINT	C1/A503	B1/A503	A1/A503	–	–	06	–
CBRR A	RESTROOM – WOMEN	F	3'-8"	7'-0"	1-3/4"	3'-4"X10'-4"	GALV. STEEL	PAINT	–	GALV. STEEL	PAINT	C3/A503	B3/A503	A3/A503	–	–	05	DEC. GATE
CBRR B	RESTROOM – MEN	F	3'-8"	7'-0"	1-3/4"	3'-4"X10'-4"	GALV. STEEL	PAINT	–	GALV. STEEL	PAINT	C3/A503	B3/A503	A3/A503	–	–	05	DEC. GATE
CBFT A	FAMILY TOILET	G	3'-0"	7'-0"	1-3/4"	3'-4"X10'-4"	GALV. STEEL	PAINT	–	GALV. STEEL	PAINT	C1/A503	B1/A503	A1/A503	–	–	04	
CBEL A	ELECTRICAL	B	6'-0"	7'-0"	1-3/4"	6'-4"X7'-4"	GALV. STEEL	PAINT	–	GALV. STEEL	PAINT	C1/A503	B1/A503	A1/A503	–	–	08	–
																	1	
COMFORT STATION																		
CSRR A	RESTROOM – WOMEN	F	3'-4"	7'-4"	–	3'-4"X10'-4"	GALV. STEEL	PAINT	–	GALV. STEEL	PAINT	C3/A503	B3/A503	A3/A503	–	–	05	DEC. GATE
CSRR B	RESTROOM – MEN	F	3'-4"	7'-4"	–	3'-4"X10'-4"	GALV. STEEL	PAINT	–	GALV. STEEL	PAINT	C3/A503	B3/A503	A3/A503	–	–	05	DEC. GATE
CSJN A	JANITOR	G	3'-0"	7'-0"	1-3/4"	3'-4"X7'-4"	GALV. STEEL	PAINT	–	GALV. STEEL	PAINT	C1/A503	B1/A503	A1/A503	–	–	06	–
																	1	

DOOR TYPES

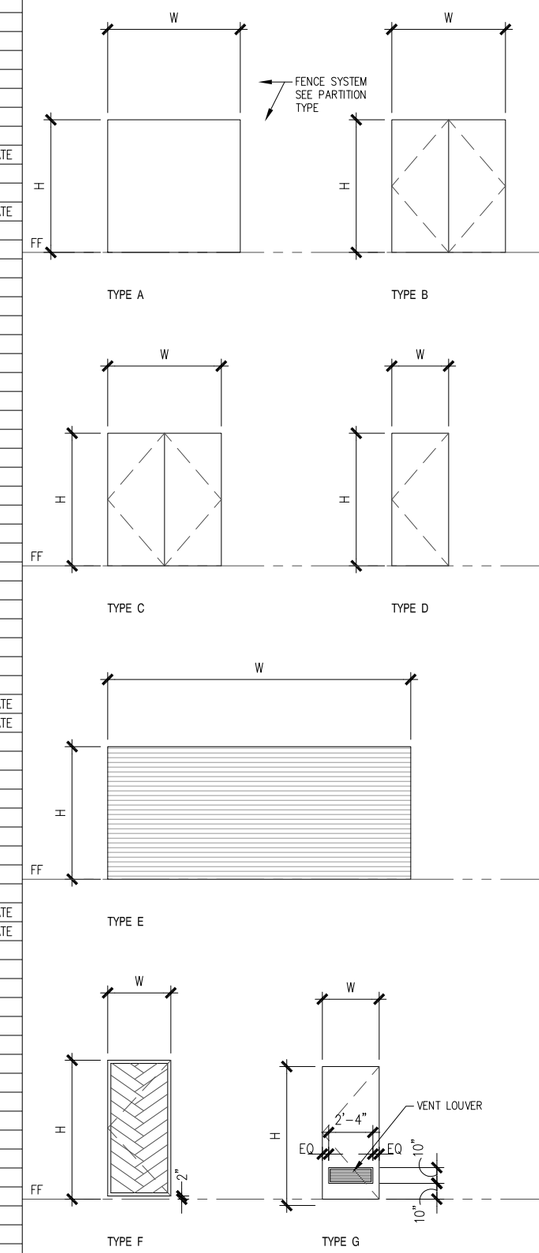

WCITARCHITECTURE
726 KAPIOLANI BOULEVARD, SUITE C-400
HONOLULU, HAWAII 96813
PHONE (808) 592-2345
www.wcitarch.com
wcit@wcitarch.com

ROBERT K. IOPA LICENSED PROFESSIONAL ARCHITECT No.6890 HAWAII, U.S.A.

Robert Iopa, AIA — 4/30/2014 — Exp. Date

THE WORK WAS PREPARED BY ME OR UNDER MY SUPERVISION AND CONSTRUCTION OF THE PROJECT WILL BE SUPERVISED BY A LICENSED ARCHITECT.

NOTE: CONTRACTOR SHALL CHECK AND VERIFY ALL DIMENSIONS AT JOB BEFORE PROCEEDING WITH WORK.

MARK	DATE	DESCRIPTION
1	2014-04-10	ADD3-REVISED HARDWARE SET

REVIEWED: DEPARTMENT OF PARKS AND RECREATION — DATE

COUNTY OF HAWAII
DEPARTMENT OF PARKS & RECREATION
101 PAUAHI STREET, SUITE 6 / HILO, HAWAII 96720 / PHONE: 808.961.8311 / FAX: 808.961.8411

PAHOA PARK MASTER PLAN
PHASE I - BID SUBMITTAL 2014-02-10

PAHOA, PUNA, HAWAII — TMK: (3) 1-5-002:020

JOB NO.: PR-4234

PLAN SHEET DESCRIPTION: SCHEDULES - DOOR

DESIGNED BY: OF
DRAWN BY: JL
CHECKED BY: SC

SHEET NO. A-501

OF #### SHEETS

DATE: 2014-02-10

PRINT DATE: 14 April 2014

WINDOW NUMBER	ROOM NAME/LOCATION	WINDOW & LOUVER					FRAMES		DETAILS			NOTES
		WINDOW & LOUVER TYPE	WIDTH	HEIGHT	SILL HT.	GLAZING	MATERIAL	FINISH	HEAD	JAMB	SILL	
PLAYCOURT												
PC-1	CONCESSION PREP	D	11'-8"	4'-6"	2'-10"	N/A	–	–	C2/A505	B2/A505	A2/A505	COIL, ROLL DOWN COUNTER DOOR
PC-2	OFFICE	B	9'-8"	4'-8"	2'-8"	CLEAR FLOAT	GALV. STEEL	PAINT	A4/A505	A4,B4/A505	A4/A505	
PC-3	CLERESTORY WALL-WEST	A	77'-0"	6'-0"	14'-0"	–	GALV. STEEL	PAINT	C3/A505	B3/A505	A3/A505	KALWALL
PC-4	CLERESTORY WALL-WEST	F	20'-5"	6'-0"	24'-0"	–	GALV. STEEL	PAINT	C1/A506	C1/A506	B1/A506	LOUVER
PC-5	CLERESTORY WALL-NORTH	H	18'-6"	8'-0"	30'-7"	–	GALV. STEEL	PAINT	C1/A506	C1/A506	B1/A506	LOUVER
PC-6	CLERESTORY WALL-NORTH	A	61'-0"	8'-0"	30'-7"	–	GALV. STEEL	PAINT	C3/A505	B3/A505	A3/A505	KALWALL
PC-7	CLERESTORY WALL-NORTH	G	19'-0"	8'-0"	30'-7"	–	GALV. STEEL	PAINT	C1/A506	C1/A506	B1/A506	LOUVER
PC-8	CLERESTORY WALL-NORTH	A	61'-0"	8'-0"	30'-7"	–	GALV. STEEL	PAINT	C3/A505	B3/A505	A3/A505	KALWALL
PC-9	CLERESTORY WALL-NORTH	H	18'-6"	8'-0"	30'-7"	–	GALV. STEEL	PAINT	C1/A506	C1/A506	B1/A506	LOUVER
PC-10	CLERESTORY WALL-SOUTH	F	20'-5"	6'-0"	24'-0"	–	GALV. STEEL	PAINT	C1/A506	C1/A506	B1/A506	LOUVER
PC-11	CLERESTORY WALL-SOUTH	A	77'-0"	6'-0"	14'-0"	–	GALV. STEEL	PAINT	C3/A505	B3/A505	A3/A505	KALWALL
CONCESSION BOOTH												
CB-1	CONCESSION PREP	D	14'-4"	4'-6"	2'-10"	N/A	–	–	C2/A505	B2/A505	A2/A505	COIL, ROLL DOWN COUNTER DOOR
CB-2	CLERESTORY WALL-WEST	C	4'-2"	3'-3"	16'-9"	–	GALV. STEEL	PAINT	C3/A505	B3/A505	A3/A505	KALWALL
CB-3	CLERESTORY WALL-WEST	F	2'-4"	3'-3"	16'-9"	–	GALV. STEEL	PAINT	C1/A506	C1/A506	B1/A506	LOUVER
CB-4	CLERESTORY WALL-WEST	C	4'-2"	3'-3"	16'-9"	–	GALV. STEEL	PAINT	C3/A505	B3/A505	A3/A505	KALWALL
CB-5	CLERESTORY WALL-WEST	F	5'-4"	3'-3"	16'-9"	–	GALV. STEEL	PAINT	C1/A506	C1/A506	B1/A506	LOUVER
CB-6	CLERESTORY WALL-WEST	C	4'-2"	3'-3"	16'-9"	–	GALV. STEEL	PAINT	C3/A505	B3/A505	A3/A505	KALWALL
CB-7	CLERESTORY WALL-WEST	F	2'-4"	3'-3"	16'-9"	–	GALV. STEEL	PAINT	C1/A506	C1/A506	B1/A506	LOUVER
CB-8	CLERESTORY WALL-WEST	C	4'-2"	3'-3"	16'-9"	–	GALV. STEEL	PAINT	C3/A505	B3/A505	A3/A505	KALWALL
COMFORT STATION												
CS-1	CLERESTORY WALL-ENTRY	C	4'-2"	2'-4"	15'-6"	–	GALV. STEEL	PAINT	C3/A505	B3/A505	A3/A505	KALWALL
CS-2	CLERESTORY WALL-ENTRY	G	2'-4"	2'-4"	15'-6"	–	GALV. STEEL	PAINT	C1/A506	C1/A506	B1/A506	LOUVER
CS-3	CLERESTORY WALL-ENTRY	C	4'-2"	2'-4"	15'-6"	–	GALV. STEEL	PAINT	C3/A505	B3/A505	A3/A505	KALWALL
CS-4	CLERESTORY WALL-ENTRY	G	5'-4"	2'-4"	15'-6"	–	GALV. STEEL	PAINT	C1/A506	C1/A506	B1/A506	LOUVER
CS-5	CLERESTORY WALL-ENTRY	C	4'-2"	2'-4"	15'-6"	–	GALV. STEEL	PAINT	C3/A505	B3/A505	A3/A505	KALWALL
CS-6	CLERESTORY WALL-ENTRY	G	2'-4"	2'-4"	15'-6"	–	GALV. STEEL	PAINT	C1/A506	C1/A506	B1/A506	LOUVER
CS-7	CLERESTORY WALL-ENTRY	C	4'-2"	2'-4"	15'-6"	–	GALV. STEEL	PAINT	C3/A505	B3/A505	A3/A505	KALWALL

WINDOW & LOUVER TYPES

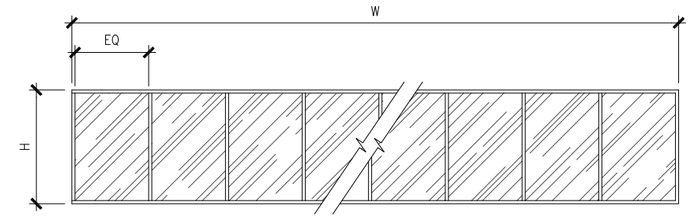

TYPE A (KALWALL SYSTEM OR EQUAL)

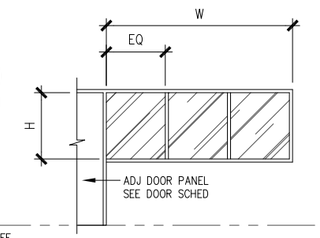

TYPE B (FIXED GLASS)

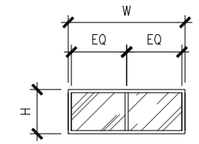

TYPE C (KALWALL SYSTEM OR EQUAL)

FF

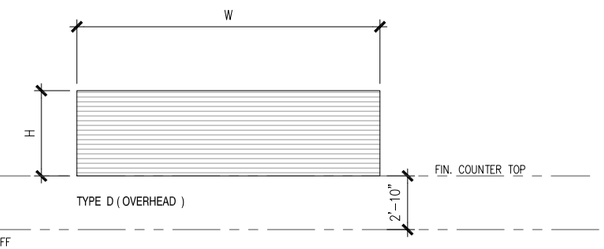

TYPE D (OVERHEAD)

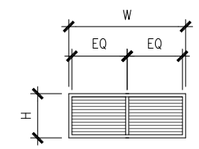

TYPE E (LOUVER)

FF

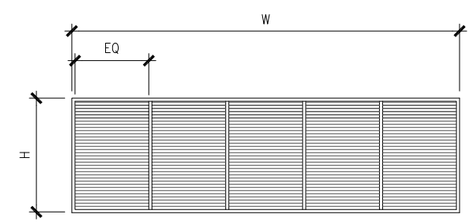

TYPE F (LOUVER)

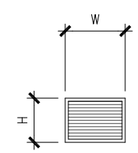

TYPE G (LOUVER)

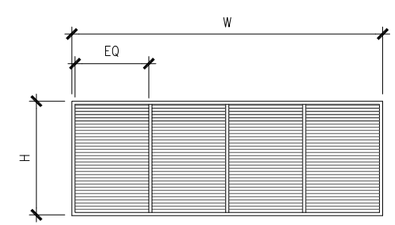

TYPE H (LOUVER)

WCITARCHITECTURE
726 KAPIOLANI BOULEVARD, SUITE C-400
HONOLULU, HAWAII 96813
PHONE (808) 592-2345
www.wcitarch.com
wci@wcitarch.com

ROBERT K. IOPA LICENSED PROFESSIONAL ARCHITECT No.6890 HAWAII, U.S.A.

Robert Iopa, AIA — 4/30/2014 — Exp. Date

THE WORK WAS PREPARED BY ME OR UNDER MY SUPERVISION AND CONSTRUCTION OF THE PROJECT CONFORMS TO THE WORK SHOWN ON THE PLANS.

NOTE: CONTRACTOR SHALL CHECK AND VERIFY ALL DIMENSIONS AT JOB SITE PRIOR TO PROCEEDING WITH WORK.

MARK	DATE	DESCRIPTION
1	2014-04-10	ADD3-REVISED WDO/LVR REF

REVIEWED: DEPARTMENT OF PARKS AND RECREATION — DATE

COUNTY OF HAWAI'I
DEPARTMENT OF PARKS & RECREATION
101 PAUAHI STREET, SUITE 6 | HILO, HAWAII 96720 | PHONE: 808.961.8311 | FAX: 808.961.8411

PAHOA PARK MASTER PLAN
PHASE I - BID SUBMITTAL 2014-02-10

JOB NO.: PR-4234 — PAHOA, PUNA, HAWAII — TMK: (3) 1-5-002:020

PLAN SHEET DESCRIPTION: SCHEDULES - WINDOW

DESIGNED BY: JL
DRAWN BY: JL
CHECKED BY: SC

SHEET NO. A-502

OF #### SHEETS

DATE: 2014-02-10

PRINT DATE: 14 April 2014

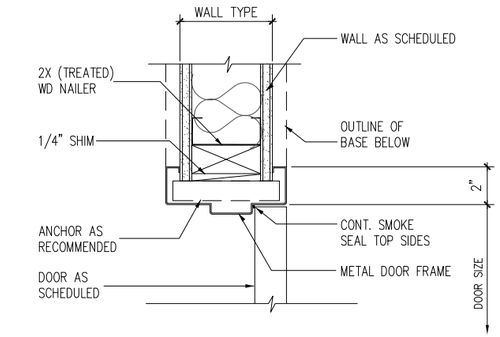

A4 JAMB– HEAD SIM
SCALE: 3"=1'–0"

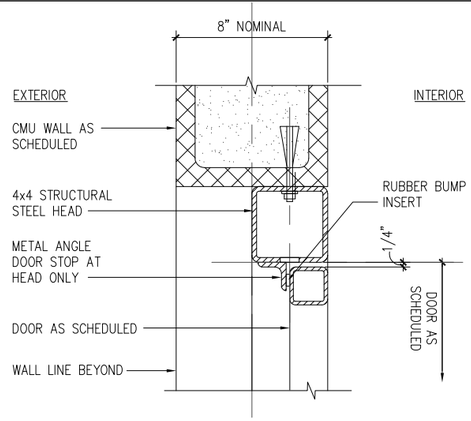

C3 HEAD–GATE, (CMU WALL)
SCALE: 3"=1'–0"

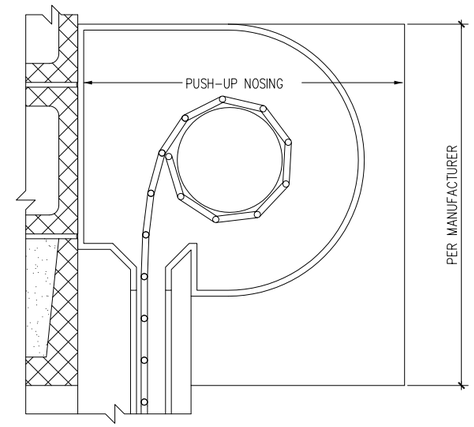

C2 HEAD–COIL DOOR, (CMU WALL)
SCALE: 3"=1'–0"

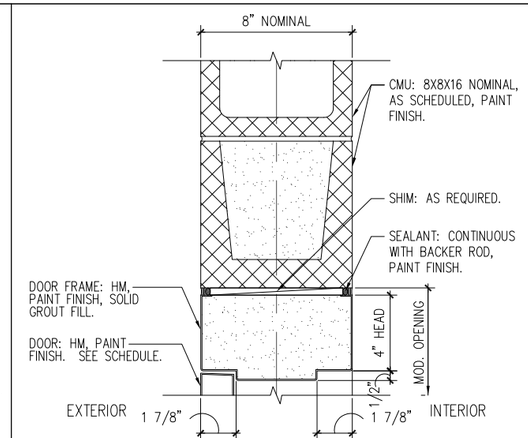

C1 HEAD–HM DOOR, (CMU WALL)
SCALE: 3"=1'–0"

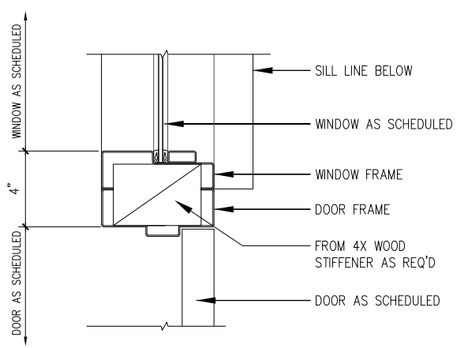

B4 JAM
SCALE: 3"=1'–0"

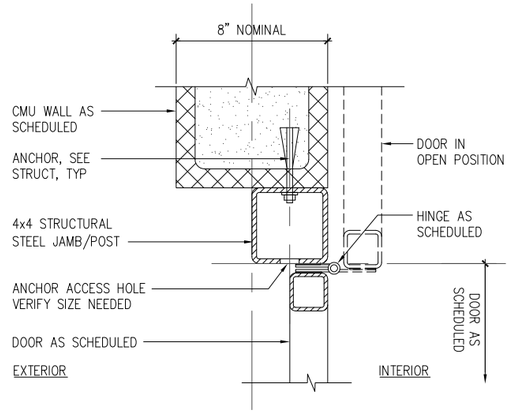

B3 JAMB–GATE, (CMU WALL)
SCALE: 3"=1'–0"

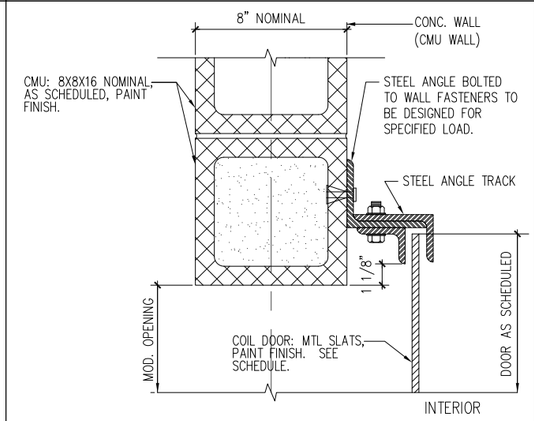

B2 JAMB–COIL DOOR, (CMU WALL)
SCALE: 3"=1'–0"

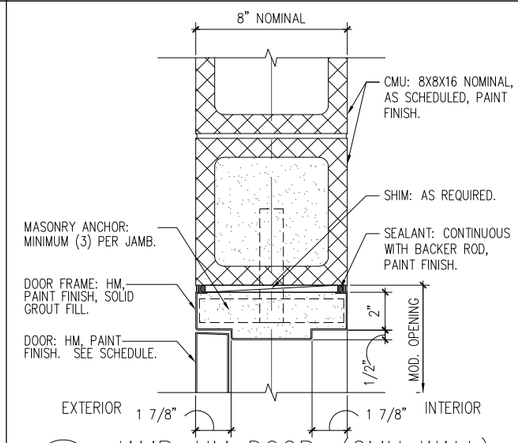

B1 JAMB–HM DOOR, (CMU WALL)
SCALE: 3"=1'–0"

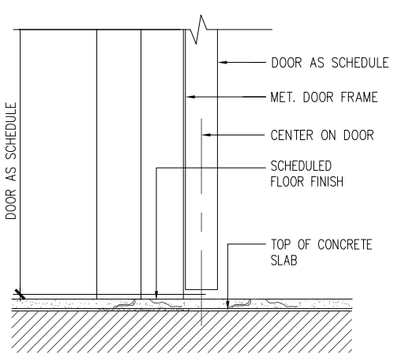

A4 THRESHOLD DOOR, (CMU WALL)
SCALE: 3"=1'–0"

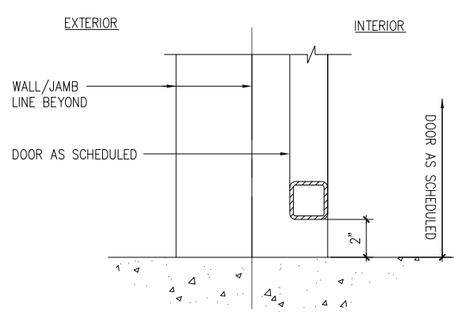

A3 THRESHOLD–GATE, (CMU WALL)
SCALE: 3"=1'–0"

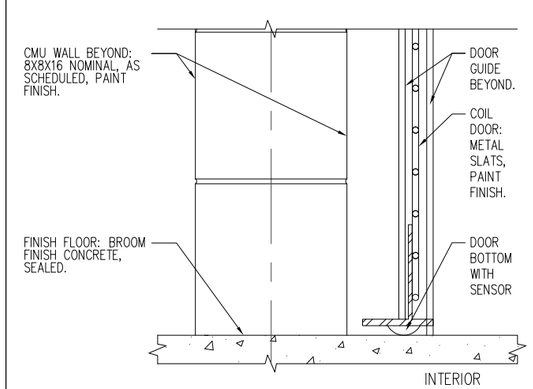

A2 THRESHOLD–COIL DOOR
SCALE: 3"=1'–0"

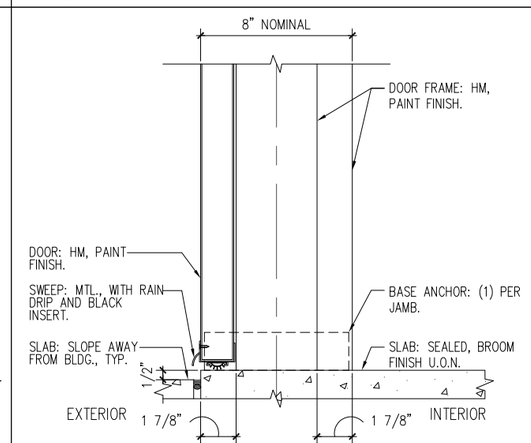

A1 THRESHOLD–HM DOOR
SCALE: 3"=1'–0"

WCITARCHITECTURE
726 KAPIOLANI BOULEVARD, SUITE C-400
HONOLULU, HAWAII 96813
PHONE (808) 592-2345
www.wcitarch.com
wci@wcitarch.com

ROBERT K. IOPA LICENSED PROFESSIONAL ARCHITECT No.6890 HAWAII, U.S.A.

Robert Iopa, AIA — 4/30/2014 — Exp. Date

THE WORK WAS PREPARED BY ME OR UNDER MY SUPERVISION AND CONSTRUCTION OF THE PROJECT WILL BE ADMINISTERED BY ME OR UNDER MY SUPERVISION.

NOTE: CONTRACTOR SHALL CHECK AND VERIFY ALL DIMENSIONS AT JOB SITE BEFORE PROCEEDING WITH WORK.

MARK	DATE	DESCRIPTION

REVIEWED: DEPARTMENT OF PARKS AND RECREATION — DATE

COUNTY OF HAWAI'I
DEPARTMENT OF PARKS & RECREATION
101 PAUAHI STREET, SUITE 6 | HILO, HAWAII 96720 | PHONE: 808.961.8311 | FAX: 808.961.8411

PAHOA PARK MASTER PLAN
PHASE I - BID SUBMITTAL 2014-02-10

JOB NO.: PR-4234 — PAHOA, PUNA, HAWAII — TMK: (3) 1-5-002:020

PLAN SHEET DESCRIPTION: DETAILS - DOOR

DESIGNED BY: OF
DRAWN BY: JL
CHECKED BY: SC

SHEET NO. A-503

OF #### SHEETS

DATE: 2014-02-10

PRINT DATE: 14 April 2014

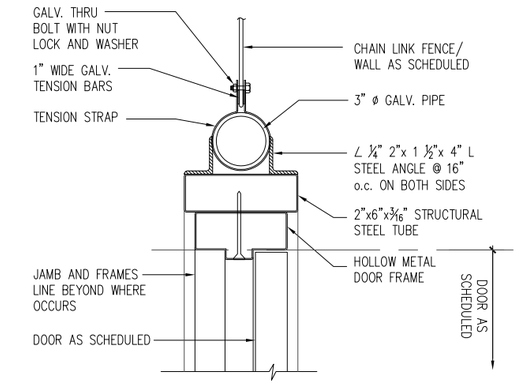

C1 HEAD–JAM (SIMILAR)
SCALE: 3"=1'–0"

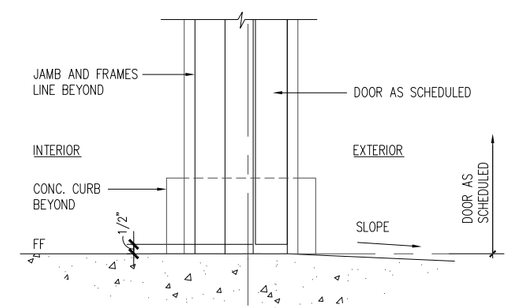

B1 THRESHOLD
SCALE: 3"=1'–0"

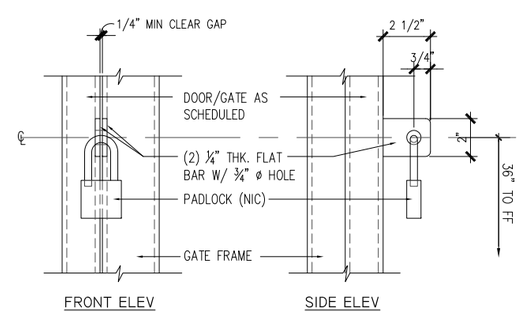

NOTE:
ALL JOINT CONNECTIONS TO BE WELDED

A1 PAD LOCK HOLSTER DETAILS
SCALE: 3"=1'–0"

WCITARCHITECTURE
725 KAPIOLANI BOULEVARD, SUITE C-400
HONOLULU, HAWAII 96813
PHONE (808) 592-2345
www.wcitarch.com
wcit@wcitarch.com

ROBERT K. IOPA LICENSED PROFESSIONAL ARCHITECT No.6890 HAWAII, U.S.A.

Robert Iopa, AIA — 4/30/2014 — Exp. Date

THE WORK WAS PREPARED BY ME OR UNDER MY SUPERVISION AND CONSTRUCTION OF THE PROJECT ADMINISTERED UNDER MY DIRECT SUPERVISION.

NOTE: CONTRACTOR SHALL CHECK AND VERIFY ALL DIMENSIONS AT JOB SITE BEFORE PROCEEDING WITH WORK.

MARK	DATE	DESCRIPTION

REVIEWED: DEPARTMENT OF PARKS AND RECREATION — DATE

COUNTY OF HAWAII
DEPARTMENT OF PARKS & RECREATION
101 PAUAHI STREET, SUITE 6 / HILO, HAWAII 96720 / PHONE: 808.961.8311 / FAX: 808.961.8411

PAHOA PARK MASTER PLAN
PHASE I - BID SUBMITTAL 2014-02-10

JOB NO.: PR-4234 — PAHOA, PUNA, HAWAII — TMK: (3) 1-5-002:020

PLAN SHEET DESCRIPTION: DETAILS - DOOR

DESIGNED BY: DF
DRAWN BY: JL
CHECKED BY: SC

SHEET NO. A-504

OF #### SHEETS

DATE: 2014–02–10

PRINT DATE: 14 April 2014

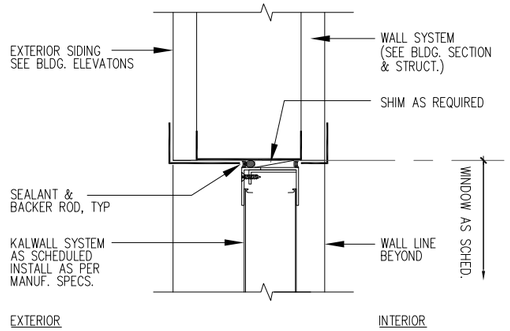

C3 HEAD–KALWALL
SCALE: 3"=1'–0"

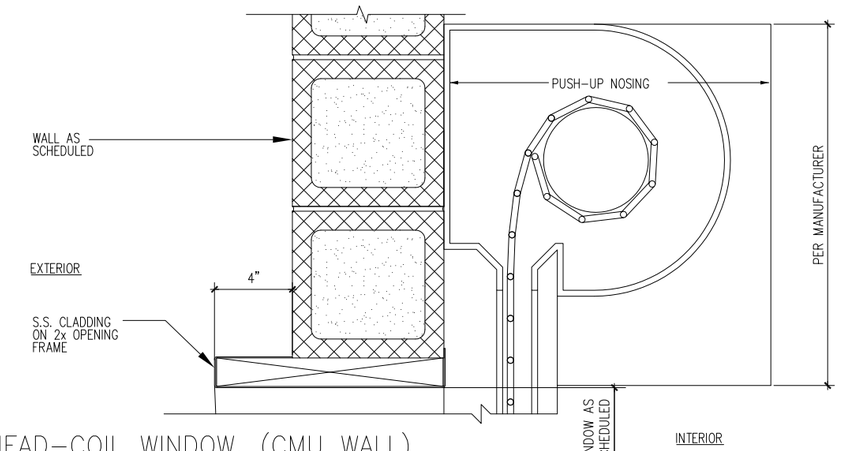

C2 HEAD–COIL WINDOW, (CMU WALL)
SCALE: 3"=1'–0"

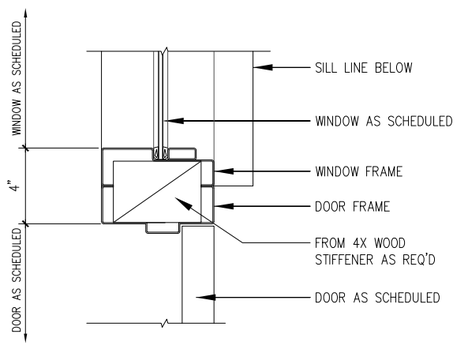

B4 JAMB–KALWALL
SCALE: 3"=1'–0"

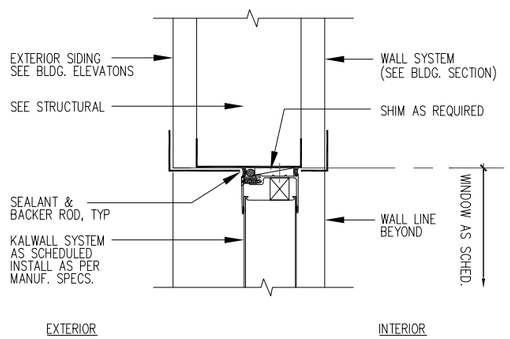

B3 JAMB–KALWALL
SCALE: 3"=1'–0"

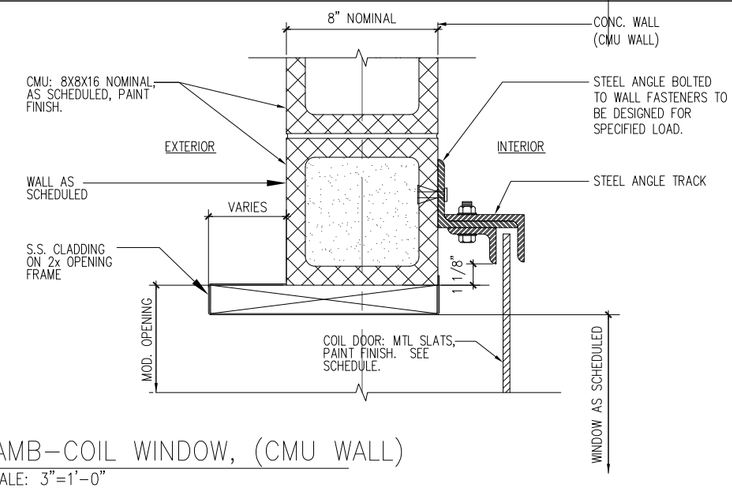

B2 JAMB–COIL WINDOW, (CMU WALL)
SCALE: 3"=1'–0"

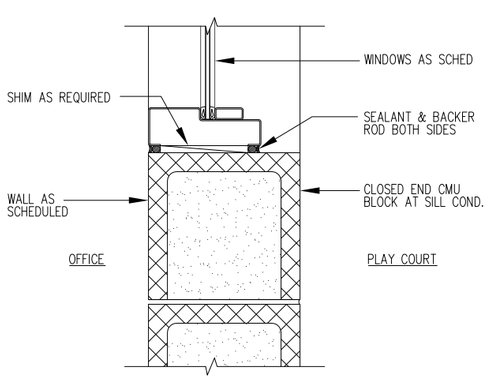

A4 SILL – HEAD–JAM SIM
SCALE: 3"=1'–0"

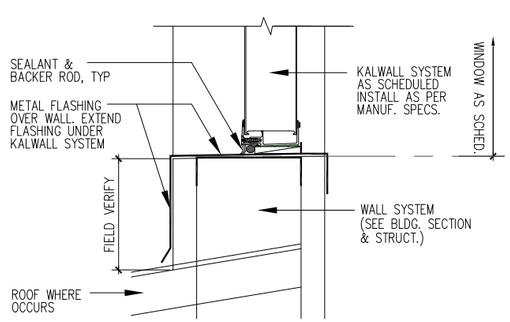

A3 SILL –KALLWALL
SCALE: 3"=1'–0"

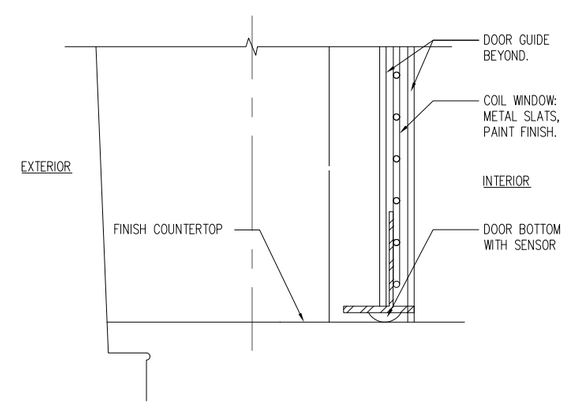

A2 SILL –COIL WINDOW
SCALE: 3"=1'–0"

WCITARCHITECTURE
725 KAPIOLANI BOULEVARD, SUITE C-400
HONOLULU, HAWAII 96813
PHONE (808) 592-2345
www.wcitarch.com
wcit@wcitarch.com

ROBERT K. IOPA
LICENSED
PROFESSIONAL
ARCHITECT
No.6890
HAWAII, U.S.A.

Robert Iopa, AIA — Exp. Date 4/30/2014

THE WORK WAS PREPARED BY ME OR UNDER MY SUPERVISION AND CONSTRUCTION OF THE PROJECT WILL BE SUPERVISED BY ME OR UNDER MY SUPERVISION.

NOTE: CONTRACTOR SHALL CHECK AND VERIFY ALL DIMENSIONS AT JOB SITE PRIOR TO PROCEEDING WITH WORK.

MARK	DATE	DESCRIPTION

REVIEWED:

DEPARTMENT OF PARKS AND RECREATION — DATE

COUNTY OF HAWAI'I
DEPARTMENT OF PARKS & RECREATION
101 PAUAHI STREET, SUITE 6 / HILO, HAWAII 96720 / PHONE: 808-961-8311 / FAX: 808-961-8411

PAHOA PARK MASTER PLAN
PHASE I - BID SUBMITTAL 2014-02-10

JOB NO.: PR-4234 — TMK: (3) 1-5-002:020 — PAHOA, PUNA, HAWAII

PLAN SHEET DESCRIPTION: DETAILS - WINDOW

DESIGNED BY: OF
DRAWN BY: JL
CHECKED BY: SC

SHEET NO. A-505

OF #### SHEETS

DATE: 2014-02-10

PRINT DATE: 14 April 2014

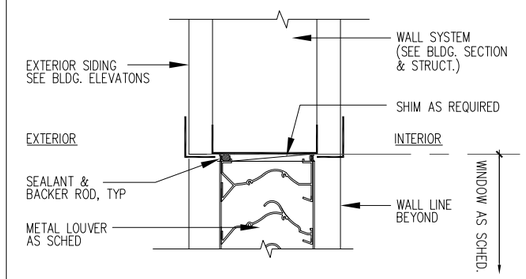

C1 HEAD – JAMB SIM LOUVER
SCALE: 3"=1'-0"

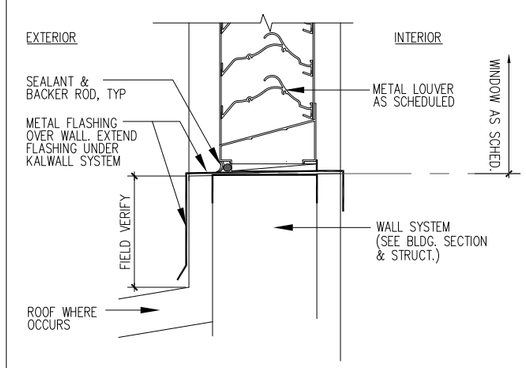

B1 SILL –LOUVER
SCALE: 3"=1'-0"

WCITARCHITECTURE
726 KAPIOLANI BOULEVARD, SUITE C-400
HONOLULU, HAWAII 96813
PHONE (808) 592-2345
www.wcitarch.com
wcit@wcitarch.com

ROBERT K. IOPA
LICENSED
PROFESSIONAL
ARCHITECT
No.6890
HAWAII, U.S.A.

Robert Iopa, AIA Exp. Date 4/30/2014
THE WORK WAS PREPARED BY ME OR UNDER MY SUPERVISION AND CONSTRUCTION OF THE PROJECT WILL BE SUPERVISED BY ME OR UNDER MY SUPERVISION.
NOTE: CONTRACTOR SHALL CHECK AND VERIFY ALL DIMENSIONS AT JOB SITE PRIOR TO PROCEEDING WITH WORK.

MARK	DATE	DESCRIPTION

REVIEWED: DATE
DEPARTMENT OF PARKS AND RECREATION

COUNTY OF HAWAII
DEPARTMENT OF PARKS & RECREATION
101 PAUAHI STREET, SUITE 6 / HILO, HAWAII 96720 / PHONE: 808.961.8311 / FAX: 808.961.8411

PAHOA PARK MASTER PLAN
PHASE I - BID SUBMITTAL 2014-02-10

JOB NO.: PR-4234 PAHOA, PUNA, HAWAII TMK: (3) 1-5-002:020

PLAN SHEET DESCRIPTION: DETAILS - LOUVER

DESIGNED BY: DF
DRAWN BY: JL
CHECKED BY: SC

SHEET NO. A-506
OF #### SHEETS
DATE: 2014-02-10

PRINT DATE: 14 April 2014

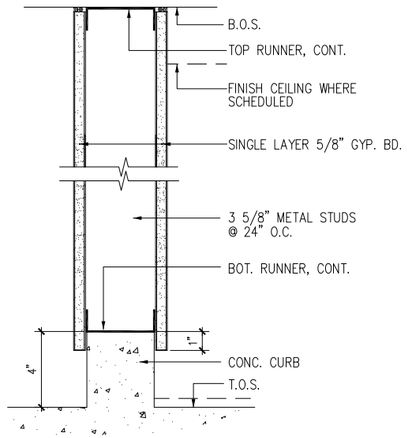

WALL TYPE-4
SCALE: 3"=1'-0"

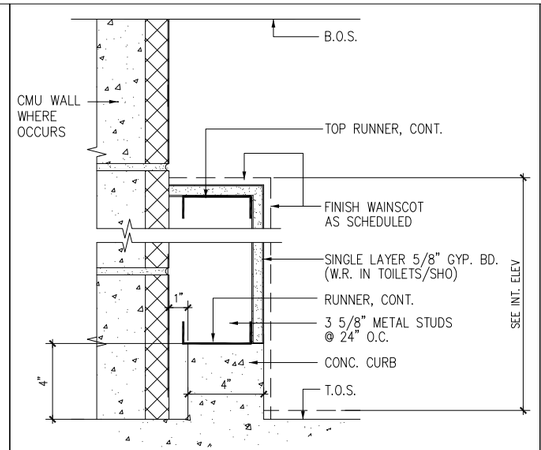

WALL TYPE-3
SCALE: 3"=1'-0"

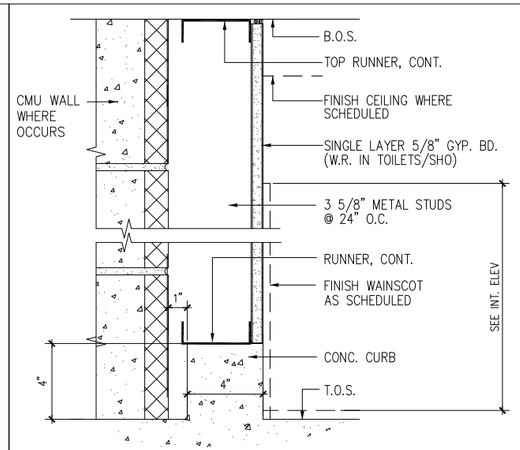

WALL TYPE-2
SCALE: 3"=1'-0"

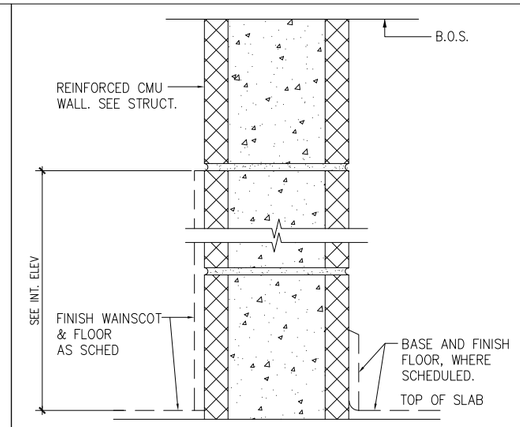

WALL TYPE-1 (FULL HEIGHT CMU)
SCALE: 3"=1'-0"

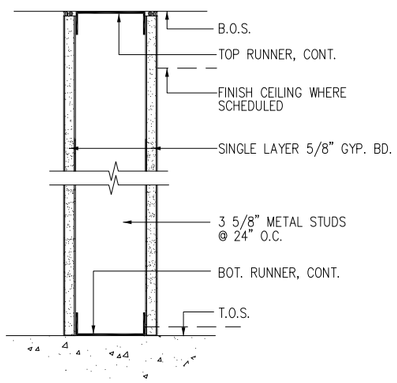

WALL TYPE-7
SCALE: 3"=1'-0"

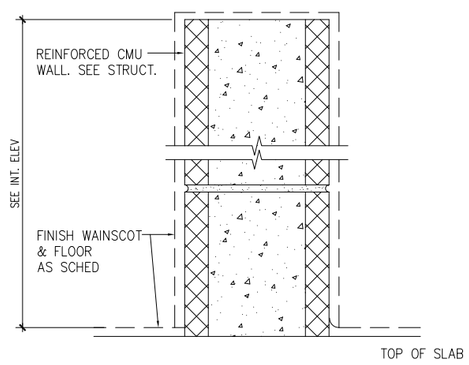

WALL TYPE-6 (LOW CMU WALL)
SCALE: 3"=1'-0"

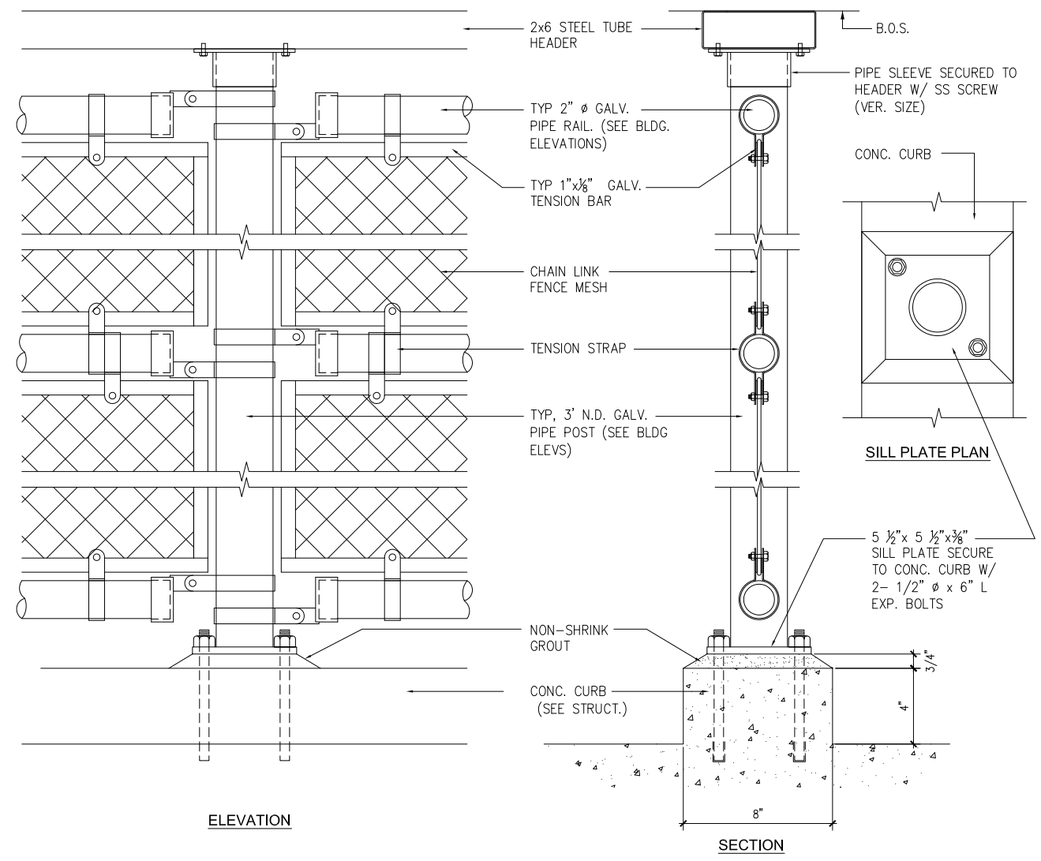

WALL TYPE-5
SCALE: 3"=1'-0"

WCITARCHITECTURE
726 KAPIOLANI BOULEVARD, SUITE C-400
HONOLULU, HAWAII 96813
PHONE (808) 592-2345
www.wcitarch.com
wcit@wcitarch.com

LICENSED PROFESSIONAL ARCHITECT No.6890 ROBERT K. IOPA HAWAII, U.S.A.

Robert Iopa, AIA — Exp. Date 4/30/2014

THE WORK WAS PREPARED BY ME OR UNDER MY SUPERVISION AND CONSTRUCTION OF THE PROJECT WILL BE OBSERVED BY ME OR MY AGENT.

NOTE: CONTRACTOR SHALL CHECK AND VERIFY ALL DIMENSIONS AT JOB BEFORE PROCEEDING WITH WORK.

MARK	DATE	DESCRIPTION

REVIEWED: DATE

DEPARTMENT OF PARKS AND RECREATION

COUNTY OF HAWAI'I
DEPARTMENT OF PARKS & RECREATION
101 PAUAHI STREET, SUITE 6 | HILO, HAWAII 96720 | PHONE: 808.961.8311 | FAX: 808.961.8411

PAHOA PARK MASTER PLAN
PHASE I - BID SUBMITTAL 2014-02-10

JOB NO.: PR-4234 — PAHOA, PUNA, HAWAII — TMK: (3) 1-5-002:020

PLAN SHEET DESCRIPTION: DETAILS - WALL TYPES

DESIGNED BY: DF
DRAWN BY: JL
CHECKED BY: SC

SHEET NO. A-507

OF #### SHEETS

DATE: 2014-02-10

PRINT DATE: 14 April 2014