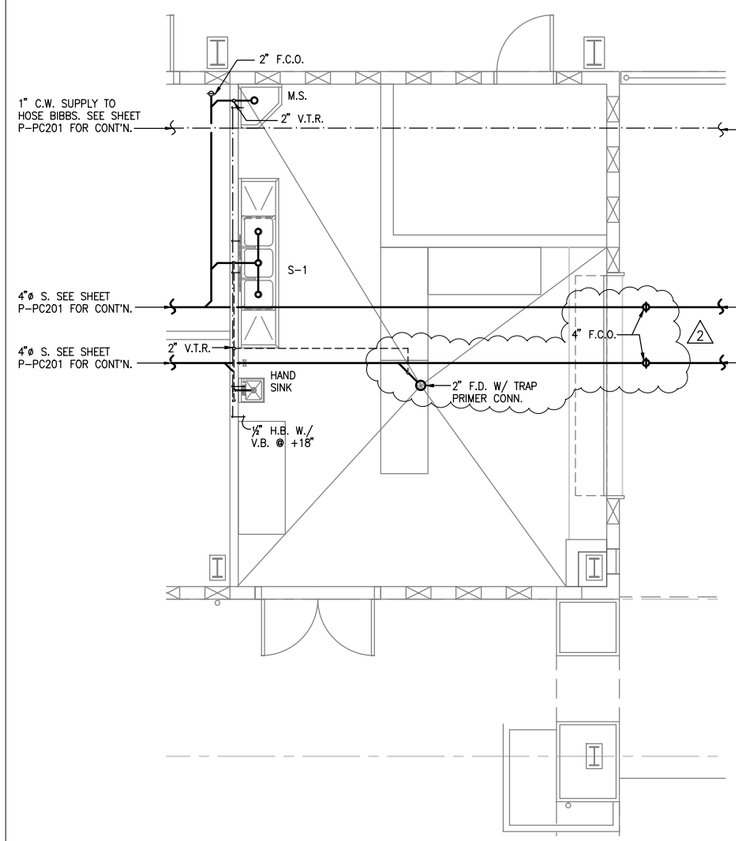

A PARTIAL PLUMBING PLAN - PLAY COURT
SCALE: 3/32" = 1'-0"

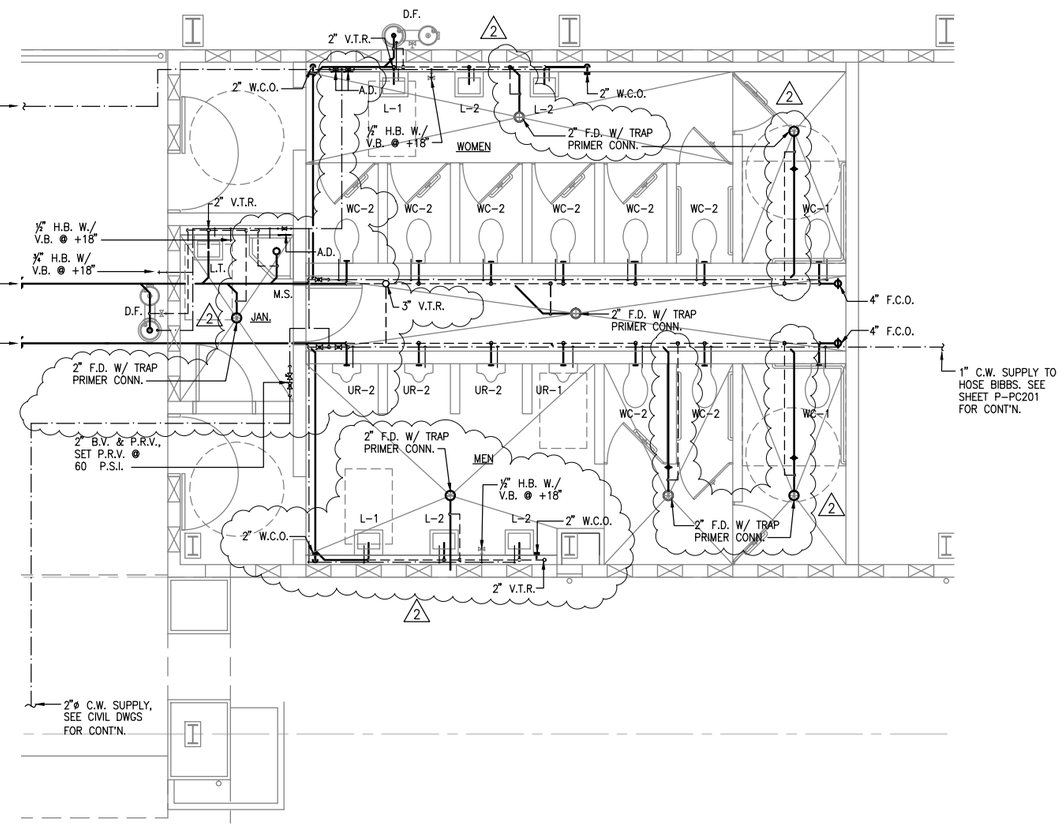

B PARTIAL PLUMBING PLAN - PLAY COURT
SCALE: 3/32" = 1'-0"

Engineering Partners, Inc.
Progressive Solutions
455 E.LANIKAULA STREET
HILO, HAWAII, 96720
www.epintegrated.com

NIMR Y. TAMIMI
LICENSED PROFESSIONAL ENGINEER
Exp. 04/30/14
No. 7936-M
HAWAII, U.S.A.

THIS WORK WAS PREPARED BY ME OR UNDER MY SUPERVISION, CONSTRUCTION OF THIS PROJECT WILL BE UNDER MY OBSERVATION.

SIGNATURE

MARK	DATE	DESCRIPTION
3	2014-04-10	ADDENDUM NO. 3
2	2014-05-07	ADDENDUM NO. 6

REVIEWED:

DEPARTMENT OF PARKS AND RECREATION DATE

COUNTY OF HAWAI'I
DEPARTMENT OF PARKS & RECREATION
101 PAUAHI STREET; SUITE 6 / HILO, HAWAII 96720 / PHONE: 808.961.8311 / FAX: 808.961.8411

PAHOA PARK MASTER PLAN
PHASE I - BID SUBMITTAL 2014-02-10

JOB NO.: PR-4234 PAHOA, PUNA, HAWAII TMK: (3) 1-5-002:020

PLAN SHEET DESCRIPTION: PARTIAL PLUMBING PLAN- PLAY COURT

DESIGNED BY: MS
DRAWN BY: MS
CHECKED BY: NYT

SHEET NO. P-PC202 OF SHEETS

DATE: 2014-02-10

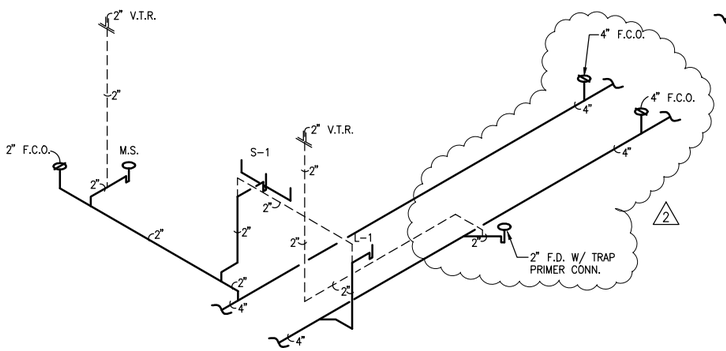

A SANITARY PIPING DIAGRAM - PLAY COURT

NOT TO SCALE

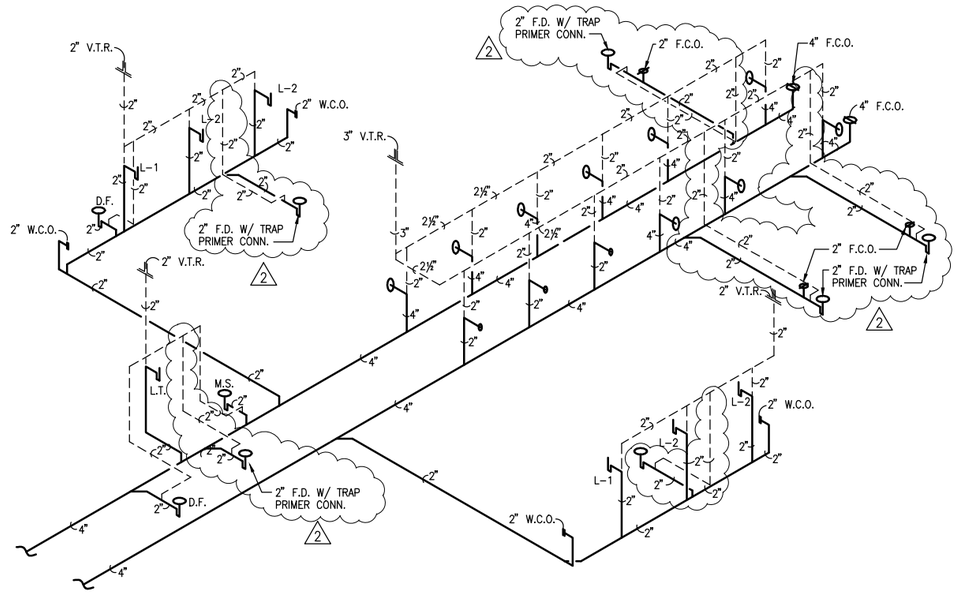

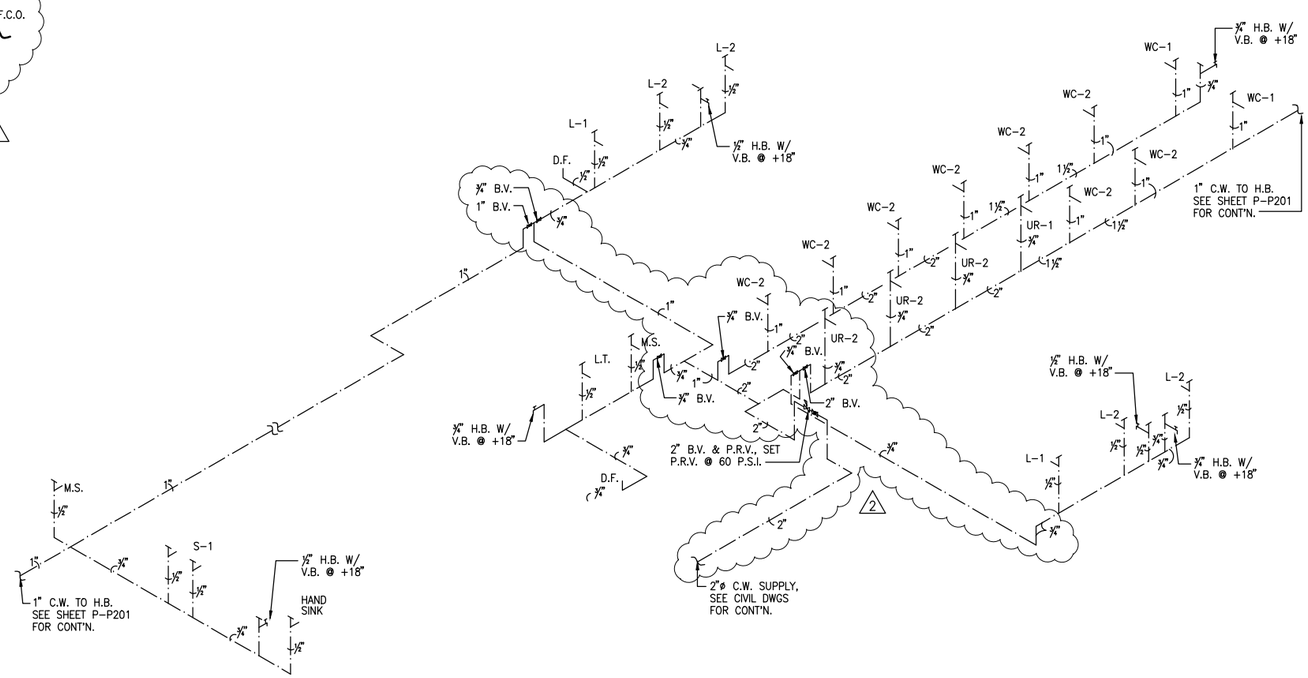

B WATER PIPING DIAGRAM- PLAY COURT

NOT TO SCALE

Engineering Partners, Inc.
Progressive Solutions
455 ELANIKAULA STREET
HILO, HAWAII, 96720
www.epintegrated.com

NAIR Y. TAMMI
LICENSED PROFESSIONAL ENGINEER
Exp. 04/30/14
No. 7936-U
HAWAII, U.S.A.

THIS WORK WAS PREPARED BY ME OR UNDER MY SUPERVISION, CONSTRUCTION OF THIS PROJECT WILL BE UNDER MY OBSERVATION.

SIGNATURE

MARK	DATE	DESCRIPTION
1	2014-04-10	ADDENDUM NO. 3
2	2014-05-07	ADDENDUM NO. 6

REVIEWED:

DEPARTMENT OF PARKS AND RECREATION — DATE

COUNTY OF HAWAI'I
DEPARTMENT OF PARKS & RECREATION
101 PAUAHI STREET, SUITE 6 / HILO, HAWAII 96720 / PHONE: 808.961.8311 / FAX: 808.961.8411

PAHOA PARK MASTER PLAN
PHASE I - BID SUBMITTAL 2014-02-10

JOB NO.: PR-4234 — PAHOA, PUNA, HAWAII — TMK: (3) 1-5-002:020

PLAN, SHEET DESCRIPTION: PIPING DIAGRAMS - PLAY COURT

DESIGNED BY: MS
DRAWN BY: MS
CHECKED BY: NYT

SHEET NO. P-PC203 OF SHEETS

DATE: 2014-02-10

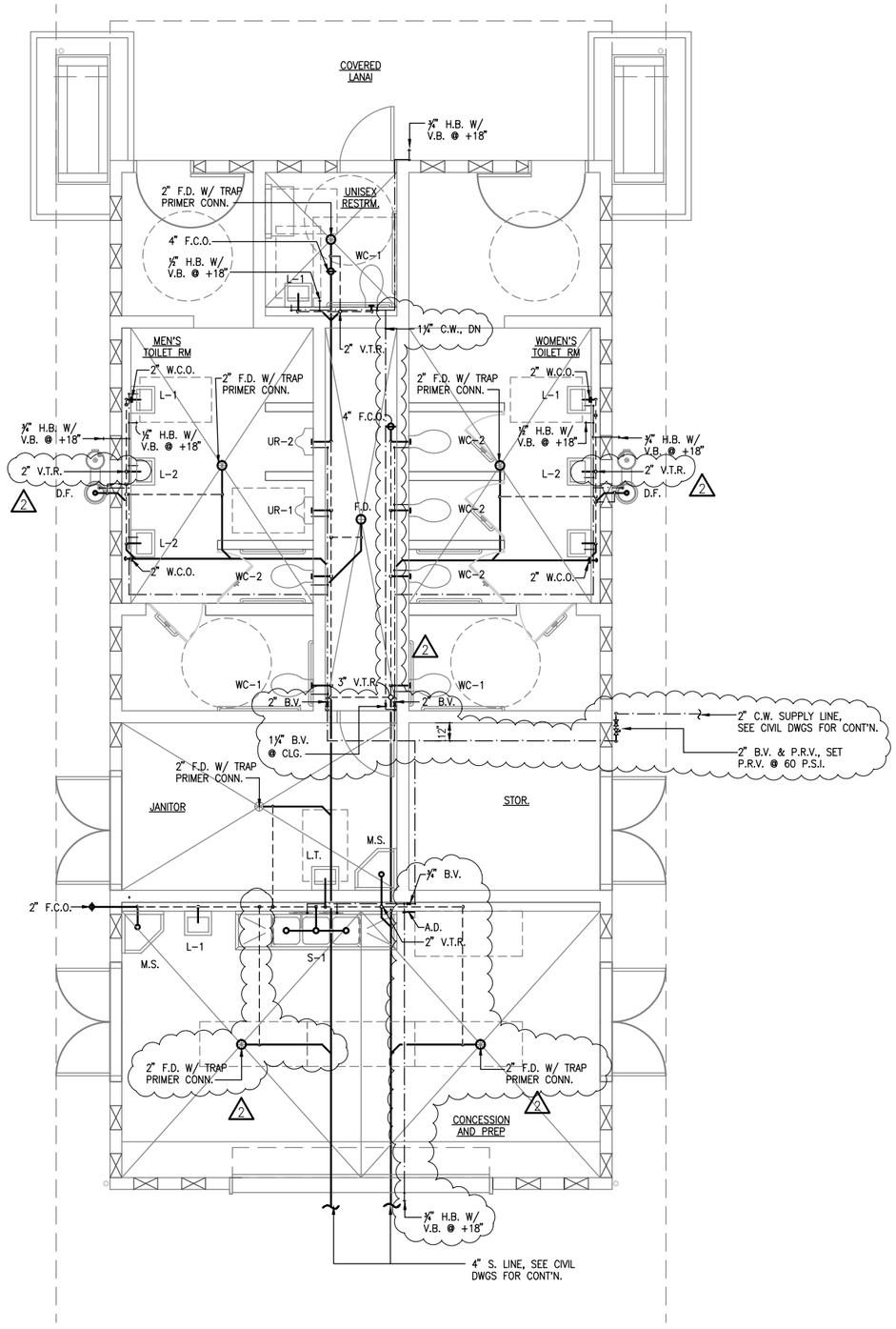

A PLUMBING PLAN - CONCESSION BOOTH

SCALE: 1/4" = 1'-0"

0 4' 8'

Engineering Partners, Inc.
Progressive Solutions
455 ELANIKAULA STREET
HILO, HAWAII, 96720
www.epintegrated.com

NAIR Y. TAMAMI
LICENSED PROFESSIONAL ENGINEER
Exp. 04/30/14
No. 7936-U
HAWAII, U.S.A.

THIS WORK WAS PREPARED BY ME OR UNDER MY SUPERVISION, CONSTRUCTION OF THIS PROJECT WILL BE UNDER MY OBSERVATION.

SIGNATURE

MARK	DATE	DESCRIPTION
1	2014-04-10	ADDENDUM NO. 3
2	2014-05-07	ADDENDUM NO. 6

REVIEWED:

DEPARTMENT OF PARKS AND RECREATION — DATE

COUNTY OF HAWAII
DEPARTMENT OF PARKS & RECREATION
101 PAUAHI STREET, SUITE 6 / HILO, HAWAII 96720 / PHONE: 808.961.8311 / FAX: 808.961.8411

PAHOA PARK MASTER PLAN
PHASE I - BID SUBMITTAL 2014-02-10

JOB NO.: PR-4234 — PAHOA, PUNA, HAWAII — TMK: (3) 1-5-002:020

PLAN SHEET DESCRIPTION: PLUMBING PLAN - CONCESSION BOOTH

DESIGNED BY: MS
DRAWN BY: MS
CHECKED BY: NYT

SHEET NO. P-CB301 OF SHEETS

DATE: 2014-02-10

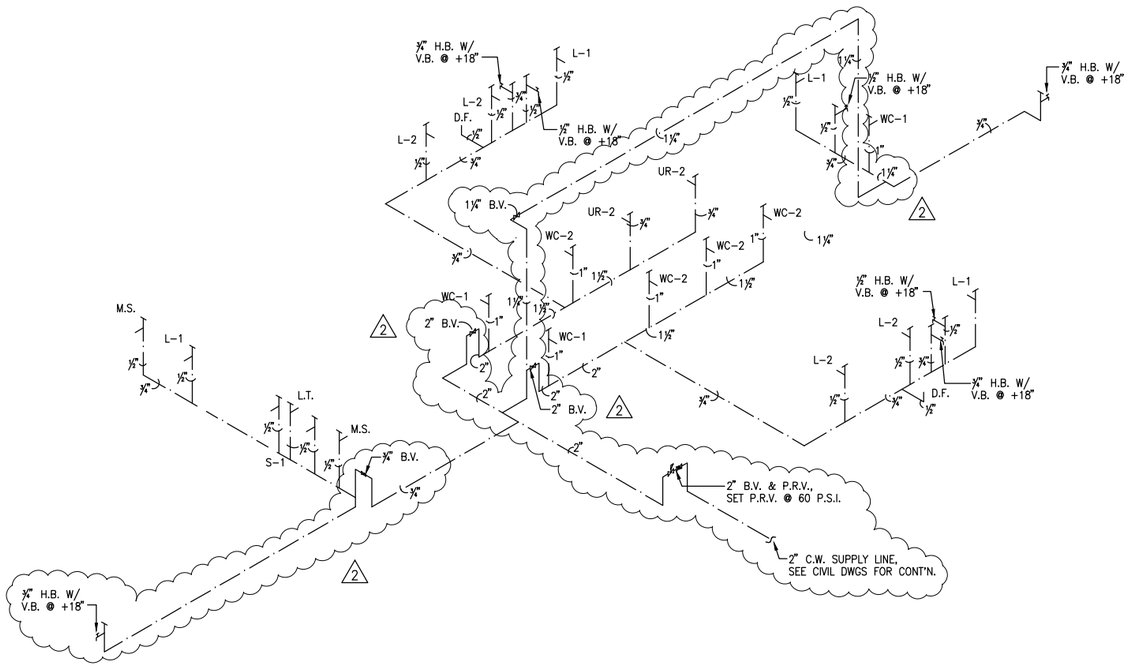

B WATER PIPING DIAGRAM - CONCESSION BOOTH

NOT TO SCALE

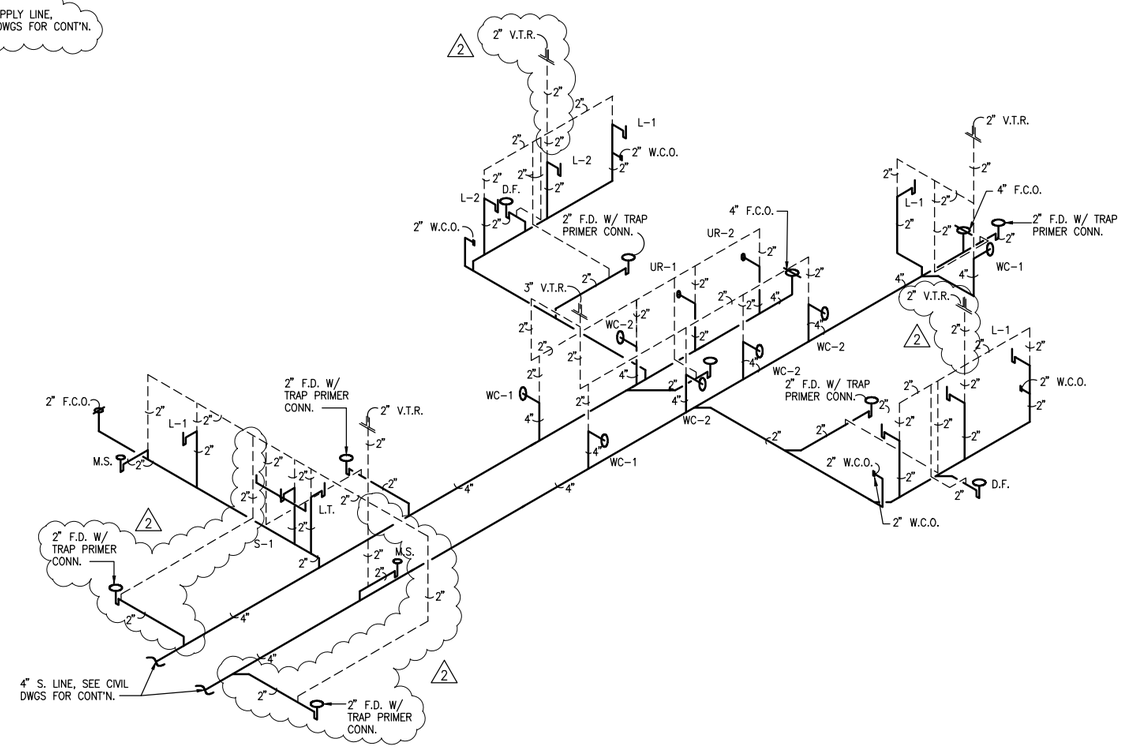

A SANITARY PIPING DIAGRAM - CONCESSION BOOTH

NOT TO SCALE

Engineering Partners, Inc.
Progressive Solutions
455 ELANIKAULA STREET
HILO, HAWAII, 96720
www.epintegrated.com

NIMR Y. TAMIMI
LICENSED PROFESSIONAL ENGINEER
Exp. 04/30/14
No. 7936-M
HAWAII, U.S.A.

THIS WORK WAS PREPARED BY ME OR UNDER MY SUPERVISION, CONSTRUCTION OF THIS PROJECT WILL BE UNDER MY OBSERVATION.

SIGNATURE

MARK	DATE	DESCRIPTION
1	2014-04-10	ADDENDUM NO. 3
2	2014-05-07	ADDENDUM NO. 6

REVIEWED:

DEPARTMENT OF PARKS AND RECREATION DATE

COUNTY OF HAWAII
DEPARTMENT OF PARKS & RECREATION
101 PAUAHI STREET; SUITE 6 / HILO, HAWAII 96720 / PHONE: 808.961.8311 / FAX: 808.961.8411

PAHOA PARK MASTER PLAN
PHASE I - BID SUBMITTAL 2014-02-10

JOB NO.: PR-4234 PAHOA, PUNA, HAWAII TMK: (3) 1-5-002:020

PLAN SHEET DESCRIPTION: PIPING DIAGRAMS - CONCESSION BOOTH

DESIGNED BY: MS
DRAWN BY: MS
CHECKED BY: NYT

SHEET NO. P-CB302 OF SHEETS

DATE: 2014-02-10

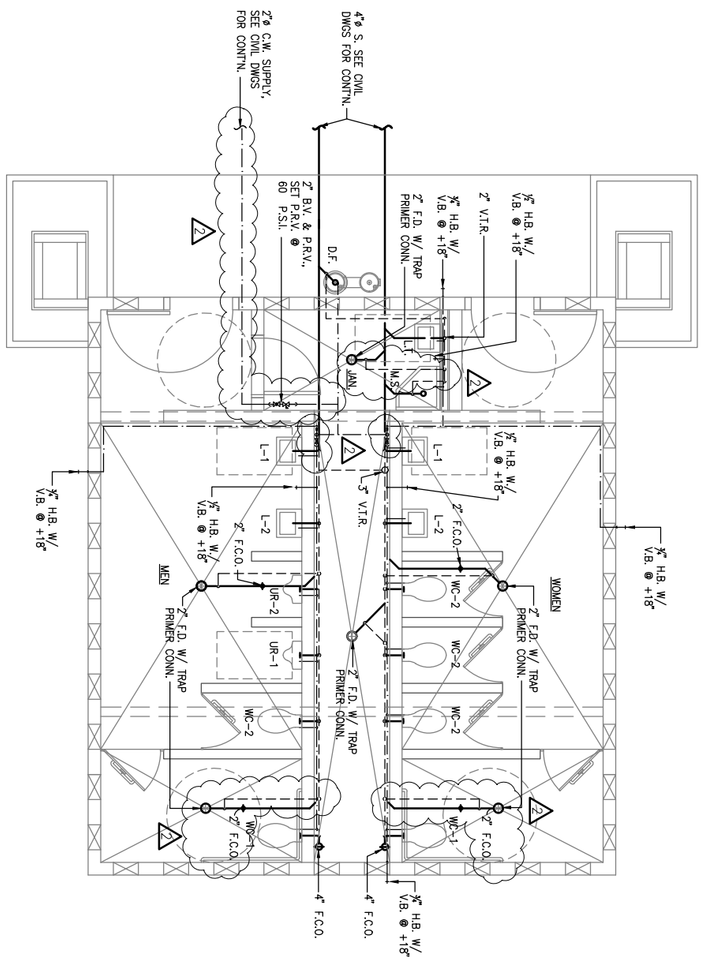

PLUMBING PLAN - COMFORT STATION

SCALE: 1/4" = 1'-0"

DESIGNED BY: MS	COUNTY OF HAWAI'I DEPARTMENT OF PARKS & RECREATION 101 PAUAHI STREET; SUITE 6 / HILO, HAWAII 96720 / PHONE: 808,961,8311 / FAX: 808,961,8411	MARK	DATE	DESCRIPTION	NIMR Y. TAMIMI LICENSED PROFESSIONAL ENGINEER Exp. 04/30/14 No. 7936-M HAWAII, U.S.A.
DRAWN BY: MS		2	2014-05-07	ADDENDUM NO. 6	
CHECKED BY: NYT					
SHEET NO. P-CS401	PAHOA PARK MASTER PLAN PHASE I - BID SUBMITTAL 2014-02-10				THIS WORK WAS PREPARED BY ME OR UNDER MY SUPERVISION, CONSTRUCTION OF THIS PROJECT WILL BE UNDER MY OBSERVATION.
OF SHEETS	JOB NO.: PR-4234 PAHOA, PUNA, HAWAII TMK: (3) 1-5-002:020				SIGNATURE
DATE: 2014-02-10	PLAN SHEET DESCRIPTION: PLUMBING PLAN - COMFORT STATION	REVIEWED: DEPARTMENT OF PARKS AND RECREATION DATE			Engineering Partners, Inc. Progressive Solutions 455 E.LANIKAULA STREET HILO, HAWAII, 96720 www.epintegrated.com

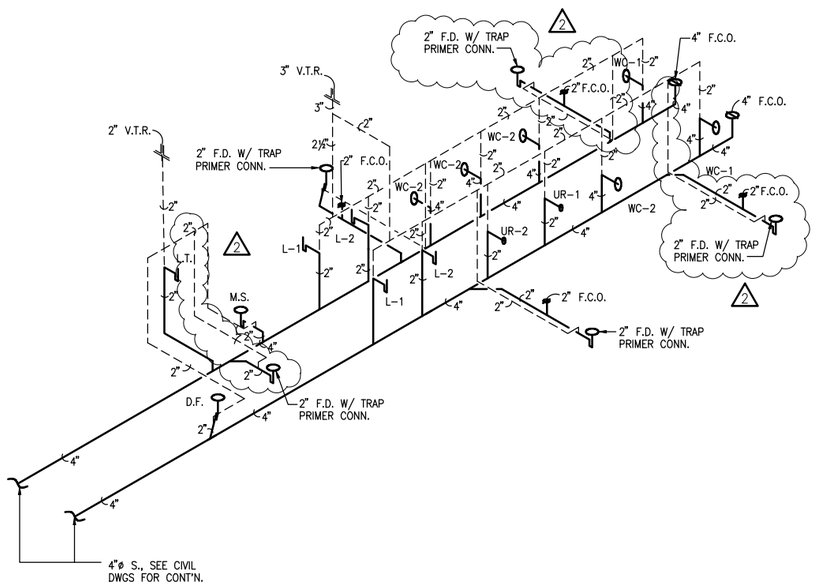

A SANITARY PIPING DIAGRAM - COMFORT STATION

NOT TO SCALE

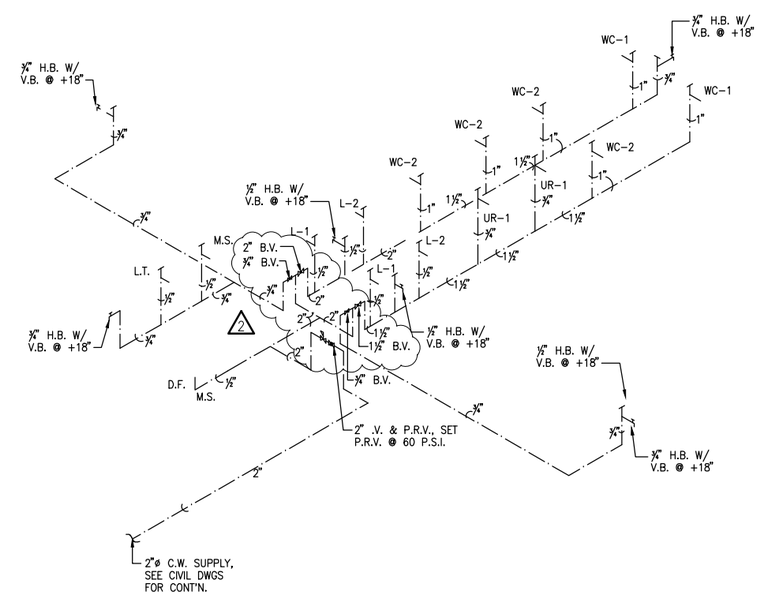

B WATER PIPING DIAGRAM- COMFORT STATION

NOT TO SCALE

Engineering Partners, Inc.
Progressive Solutions
455 E.LANIKAULA STREET
HILO, HAWAII, 96720
www.epintegrated.com

NIMR Y. TAMIMI
LICENSED PROFESSIONAL ENGINEER
Exp. 04/30/14
No. 7936-M
HAWAII, U.S.A.

THIS WORK WAS PREPARED BY ME OR UNDER MY SUPERVISION, CONSTRUCTION OF THIS PROJECT WILL BE UNDER MY OBSERVATION.

SIGNATURE

MARK	DATE	DESCRIPTION
2	2014-05-07	ADDENDUM NO. 6

REVIEWED:

DEPARTMENT OF PARKS AND RECREATION DATE

COUNTY OF HAWAII
DEPARTMENT OF PARKS & RECREATION
101 PAUAHI STREET; SUITE 6 / HILO, HAWAII 96720 / PHONE: 808.961.8311 / FAX: 808.961.8411

PAHOA PARK MASTER PLAN
PHASE I - BID SUBMITTAL 2014-02-10

JOB NO.: PR-4234 PAHOA, PUNA, HAWAII TMK: (3) 1-5-002:020

PLAN SHEET DESCRIPTION: PIPING DIAGRAMS - COMFORT STATION

DESIGNED BY: MS
DRAWN BY: MS
CHECKED BY: NYT

SHEET NO. P-CS402 OF SHEETS

DATE: 2014-02-10