STRUCTURAL GENERAL NOTES:

1. ALL WORK SHALL CONFORM TO THE **2006** INTERNATIONAL BUILDING CODE AND THE COUNTY OF HAWAII AMENDMENTS.

2. STRUCTURAL DRAWINGS REPRESENT THE FINISHED STRUCTURE, AND DO NOT SPECIFY THE MEANS AND METHODS OF CONSTRUCTION. THE CONTRACTOR SHALL PROVIDE ALL MEANS NECESSARY TO PROTECT THE STRUCTURE, AND ANY ADJACENT NEW OR EXISTING STRUCTURES DURING CONSTRUCTION. SUCH MEASURES SHALL INCLUDE, BUT NOT BE LIMITED TO BRACING AND SHORING FOR LOADS ACTING ON THE STRUCTURE DURING CONSTRUCTION.

   OBSERVATION BY THE STRUCTURAL ENGINEER DURING CONSTRUCTION WILL NOT INCLUDE INSPECTION OF AFOREMENTIONED BRACING AND SHORING.

3. EXISTING CONDITIONS ARE SHOWN TO THE BEST OF OUR KNOWLEDGE. DISCREPANCIES SHALL PROMPLY BE REPORTED TO THE ARCHITECT AND BE RESOLVED BEFORE PROCEEDING WITH THE WORK.

4. PRIOR TO COMMENCEMENT OF CONSTRUCTION, THE CONTRACTOR SHALL VERIFY THE LOCATIONS OF ALL UTILITIES, WHICH MAY BE AFFECTED BY HIS WORK. INTERFERENCES WITH THE STRUCTURE SHALL PROMPTLY BE REPORTED TO THE ARCHITECT AND BE RESOLVED BEFORE PROCEEDING WITH THE WORK.

5. THE CONTRACTOR SHALL BE SOLELY RESPONSIBLE FOR COORDINATING THE WORK OF ALL TRADES AND VERIFYING ALL DIMENSIONS. THE CONTRACTOR SHALL NOTIFY THE ARCHITECT OF ALL STRUCTURAL DISCREPANCIES, AND THESE DISCREPANCIES SHALL BE RESOLVED PRIOR TO PROCEEDING WITH THE WORK.

6. SHOULD A DISCREPANCY OCCUR ON THE DRAWINGS BETWEEN ANY PROJECT SPECIAL NOTES/SPECIAL DETAILS, AND THE TYPICAL SPECS/TYPICAL DETAILS, SAID SPECIAL NOTES/SPECIAL DETAILS SHALL TAKE PRECEDENCE.

7. SEE ARCHITECTURAL DRAWINGS FOR DIMENSIONS AND LOCATIONS OF ARCHITECTURAL OPENINGS SHOWN ON THE STRUCTURAL DRAWINGS.

8. SEE ELECTRICAL AND MECHANICAL DRAWINGS FOR DIMENSIONS AND LOCATIONS OF ELECTRICAL/MECHANICAL PENETRATIONS SHOWN ON THE STRUCTURAL DRAWINGS.

9. PENETRATIONS AND OPENINGS WITH ANY DIMENSION GREATER THAN 2" THAT ARE NOT SHOWN ON THE STRUCTURAL DRAWINGS ARE PROHIBITED UNLESS APPROVED IN WRITING BY THE STRUCTURAL ENGINEER. NO PENETRATION SHALL BE ALLOWED THROUGH ANY STRUCTURAL MEMBER WITHOUT THE APPROVAL OF THE ENGINEER.

10. ANY CONSTRUCTION MATERIAL THAT IS TEMPORARILY PLACED ON FLOOR AND/OR ROOF FRAMING SHALL BE DISTRIBUTED OVER THE FRAMING SYSTEM SUCH THAT THE CONSTRUCTION LOAD DOES NOT EXCEED THE LOAD THAT THE FRAMING SYSTEM WAS DESIGNED FOR.

11. DESIGN CRITERIA –

   A. CODES AND STANDARDS

      1. INTERNATIONAL BUILDING CODE, **2006** EDITION

   B. DESIGN LIVE LOADS

1. ROOF	= 20 PSF

   C. DESIGN DEAD LOADS (ADDITIONAL TO SELF WEIGHT)

1. FINISH @ ROOF	= 9 PSF
2. MECHANICAL & ELECTRICAL @ ROOF	= 1 PSF
3. COLLATERAL ROOF LOAD(PV PANELS)	= 5 PSF

   D. WIND

BASIC WIND SPEED	105 MPH
EFFECTIVE WIND SPEED / Kzt	100 MPH / 1.0
EXPOSURE CATEGORY	C
PRIMARY FRAME DESIGN METHOD	METHOD 2 (ANALYTICAL PROCEDURE)
BUILDING CLASSIFICATION	OPENED
IMPORTANCE FACTOR	1.0

   E. SEISMIC

OCCUPANCY CATEGORY	II
SITE CLASS	B
Sds	1.55 g
Sd1	0.66 g
SEISMIC DESIGN CATEGORY	E

12. SHOP DRAWINGS REQUIRED BY THE SPECIFICATIONS SHALL BE SUBMITTED TO THE ARCHITECT FOR REVIEW PRIOR TO FABRICATION OF ANY STRUCTURAL COMPONENTS.

13. THE CONTRACTOR SHALL DETAIL ALL MEMBERS AND CONNECTIONS NOT SHOWN BUT WHICH ARE REQUIRED AND SHALL SUBMIT THEM TO THE ENGINEER FOR REVIEW. COST OF THESE MEMBERS AND CONNECTIONS SHALL BE INCLUDED IN THE CONTRACTOR'S BID PRICE.

14. ALL COSTS FOR SATISFYING THE REQUIREMENTS OF THESE CONSTRUCTION DOCUMENTS SHALL BE BORNE BY THE CONTRACTOR.

15. THE CONTRACTOR SHALL BE RESPONSIBLE FOR PROTECTION OF THE ADJACENT PROPERTIES, STRUCTURES, STREETS AND UTILITIES DURING THE CONSTRUCTION PERIOD.

16. DETAILS NOTED AS TYPICAL ON THE STRUCTURAL DRAWINGS SHALL APPLY IN ALL CONDITIONS UNLESS SPECIFICALLY SHOWN OR NOTED.

17. THE GENERAL CONTRACTOR AND HIS SUBCONTRACTORS MUST SUBMIT IN WRITING ANY REQUESTS FOR MODFICATIONS TO THE PLANS AND SPECIFICATIONS.

FOUNDATION

1. THE FOUNDATION DESIGN WAS BASED ON THE THE GEOTECHINCAL INVESTIGATION REPORT DATED SEPTEMBER 25, 2013, BY CONSTRUCTION ENGINEERING LABS.

   ALLOWABLE SOIL BEARING PRESSURE = 3000 PSF (DEAD + LIVE)
   ALLOWABLE INCREASE FOR WIND OR SEISMIC, 1000 PSF = 4000 PSF (TOTAL)
   ALLOWABLE PASSIVE EARTH RESISTANCE = 600 PCF
   FRICTIONAL RESISTANCE = 0.45 x DEAD LOAD

2 ANY FOOTING BACKFILL AND UTILITY TRENCH BACKFILL WITHIN THE BUILDING AREA SHALL BE MECHANICALLY COMPACTED IN LAYERS. FLOODING IS PROHIBITED.

3 CONTRACTOR SHALL PROVIDE FOR DE–WATERING OF EXCAVATIONS FROM EITHER SURFACE WATER, GROUND WATER, OR SEEPAGE.

CONCRETE

1. ALL CONCRETE UNLESS OTHERWISE NOTED SHALL BE REGULAR WEIGHT HARD ROCK TYPE (150#/CU.FT.).

2. ALL PHASES OF WORK PERTAINING TO THE CONCRETE CONSTRUCTION SHALL CONFORM TO THE "BUILDING CODE REQUIREMENTS FOR REINFORCED CONCRETE" (ACI 318–**05**) WITH MODIFICATIONS AS NOTED IN THE DRAWINGS OR SPECIFICATIONS.

3. SCHEDULE OF STRUCTURAL CONCRETE 28–DAY STRENGTH AND TYPES:

LOCATION OF STRUCTURE	STRENGTH
SLAB ON GRADE, & GRADE BEAMS	3000 PSI
ALL OTHER CONCRETE	3000 PSI

2 (revision mark)

4. PORTLAND CEMENT SHALL CONFORM TO ASTM C–150 TYPE I OR TYPE II.

5. AGGREGATE FOR HARDROCK CONCRETE SHALL CONFORM TO ALL REQUIREMENTS AND TESTS OF ASTM C–33 AND PROJECT SPECIFICATIONS.

6. CONCRETE MIXES SHALL BE DESIGNED BY A QUALIFIED TESTING LABORATORY AND SHALL BE SUBMITTED TO THE STRUCTURAL ENGINEER FOR HIS REVIEW 2 WEEKS PRIOR TO POUR.

7. CONCRETE MIXING OPERATION, ETC. SHALL CONFORM TO ASTM C–94.

8. PLACEMENT OF CONCRETE SHALL CONFORM TO ACI STANDARD 301 AND PROJECT SPECIFICATIONS.

9. UNLESS OTHERWISE NOTED ON THE PLANS, MINIMUM CLEAR COVERAGE OF NEW CONCRETE OVER OUTER REINFORCING BARS SHALL BE AS FOLLOWS:

   A. CONCRETE POURED DIRECTLY AGAINST EARTH...............3" CLEAR TO REINFORCING

   B. WALL FACES:

      EXPOSED TO EARTH WITH FORMED SURFACES OR EXPOSED TO WEATHER..........1–1/2" CLEAR FOR #5 BAR & SMALLER
      2" CLEAR FOR #6 BARS & LARGER

      INTERIOR FACES.....................3/4 CLEAR

   C. BEAMS AND COLUMNS:

      NOT EXPOSED TO EARTH OR WEATHER.........................1–1/2" CLEAR TO STIRRUPS & TIES
      FORMED AND EXPOSED TO EARTH OR WEATHER.........................1 1/2" CLEAR TO STIRRUPS & TIES

   D. STRUCTURAL SLABS................1" CLEAR AT TOP AND BOTTOM

10. ALL REINFORCING BARS, ANCHOR BOLTS AND OTHER CONCRETE INSERTS SHALL BE WELL SECURED IN POSITION PRIOR TO PLACING CONCRETE.

11. PROJECTING CORNERS OF BEAMS, WALLS, COLUMNS, EQUIPMENT PADS, ETC., SHALL BE FORMED WITH 3/4" CHAMFER, UNLESS OTHERWISE NOTED ON ARCHITECTURAL DRAWINGS.

12. PROVIDE SLEEVES FOR PLUMBING AND ELECTRICAL OPENINGS IN CONCRETE BEFORE PLACING. DO NOT CUT ANY REINFORCING WHICH MAY CONFLICT. CORING IN CONCRETE IS NOT PERMITTED EXCEPT AS SHOWN. NOTIFY THE STRUCTURAL ENGINEER IN ADVANCE OF CONDITIONS NOT SHOWN ON THE DRAWINGS.

13. CONDUIT OR PIPE SIZE (O.D.) THAT IS BURIED IN ANY CONCRETE SLABS SHALL NOT EXCEET 25 PERCENT OF SLAB THICKNESS AND SHALL BE PLACED BETWEEN THE TOP AND BOTTOM REINFORCING UNLESS SPECIFICALLY DETAILED OTHERWISE. CONCENTRATIONS OF CONDUITS OR PIPES SHALL BE AVOIDED EXCEPT WHERE DETAILED OPENINGS ARE PROVIDED.

14. THE CONCRETE SLAB THICKNESS SHALL BE MAINTAINED AS A MINIMUM UNLESS OTHERWISE SHOWN.

15. PROVIDE TWO–WEEK SCHEDULES SHOWING EXPECTED CONCRETE POUR LOCATIONS AND TIMES. NOTIFY STRUCTURAL ENGINEER AND SPECIAL INSPECTOR 48 HOURS PRIOR TO ANY CONCRETE POUR IF DIFFERENT THAN ON TWO–WEEK SCHEDULE.

16. CONCRETE ADMIXTURES CONTAINING CHLORIDE OR CHLORIDE SALTS SHALL NOT BE USED.

17. SEE SPECIFICATIONS FOR CONCRETE WITH SPECIAL CORROSION PROTECTION REQUIREMENTS.

18. ALL ROUGHENED SURFACES IN CONCRETE SHALL BE MADE WITH A MINIMUM AMPLITUDE OF 1/4"

REINFORCING STEEL

1. ALL REINFORCING STEEL SHALL BE DETAILED AND PLACED IN CONFORMANCE WITH THE "BUILDING CODE REQUIREMENTS FOR REINFORCED CONCRETE" (ACI 318–**05**), THE CRSI "MANUAL OF STANDARD PRACTICE," AND THE "ACI DETAILING MANUAL (SP–66) AS MODIFIED BY THE PROJECT DRAWINGS AND SPECIFICATIONS.

2. REINFORCING BARS SHALL CONFORM TO ASTM A–615 GRADE 60 REQUIREMENTS. #4 AND SMALLER BARS MAY BE GRADE 40.

3. ANCHOR BOLTS, DOWELS AND OTHER EMBEDDED ITEMS ARE TO BE SECURELY TIED IN PLACE BEFORE CONCRETE IS POURED.

4. ALL REINFORCING BAR BENDS SHALL BE MADE COLD.

5. REINFORCING SPLICES SHALL BE MADE ONLY WHERE INDICATED ON THE DRAWINGS.

6. DOWELS BETWEEN FOOTING AND WALL OR COLUMNS SHALL BE THE SAME GRADE, SIZE, SPACING, AND NUMBER AS THE VERTICAL REINFORCING RESPECTIVELY, U.O.N.

7. WELDING OF REINFORCING STEEL IS NOT PERMITTED UNLESS OTHERWISE SHOWN ON THE DRAWINGS.

8. CONTRACTOR SHALL SUBMIT REINFORCING BAR LAYOUTS AND DETAILS FOR ARCHITECT'S REVIEW PRIOR TO FABRICATION. FABRICATE FROM REVIEWED DRAWINGS ONLY.

9. REINFORCING BARS SHALL BE AS LONG AS PRACTICABLE AND AS DETAILED AND SHALL BE LAPPED AT SPLICES AND CORNERS NOT LESS THAN 32 BAR DIAMETER (24" MINIMUM), UNLESS OTHERWISE SHOWN. STAGGER HORIZONTAL WALL BAR SPLICES. IN GENERAL, BAR SPLICES SHALL BE MADE AT POINTS OF MINIMUM STRESS. IN BEAMS AND SLABS, SPLICE TOP BARS AT MID–SPAN, BOTTOM BARS OVER SUPPORTS, UNLESS OTHERWISE SHOWN. EMBEDDED METAL COMPONENTS MADE UP OF ALLOYS THAT ARE

10. DIS–SIMILAR TO THAT OF THE REINFORCING STEEL SHALL NOT BE ATTACHED DIRECTLY TO REINFORCING. MEASURES SHALL BE TAKEN TO ELECTRICALLY ISOLATE SAID COMPONENTS FROM ANY REINFORCING TO PREVENT CATHODIC EFFECTS.

CMU:

1. ALL CONCRETE MASONRY UNITS (CMU) SHALL CONFORM TO ASTM C90, LATEST EDITION, WITH COMPRESSIVE STRENGTH OF 1,900 PSI.

2. MORTAR SHALL BE PROPORTIONED AS NECESSARY TO CONFORM TO THE REQUIREMENTS OF IBC TABLE 2103.8 (ASTM C270) FOR TYPE M OR S MORTAR.

3. GROUT SHALL CONFORM TO ASTM C476 AND HAVE A MINIMUM COMPRESSIVE STRENGTH OF 2,500 PSI AT 28 DAYS.

4. THE MINIMUM ULTIMATE COMPRESSIVE STRENGTH OF THE MASONRY WALL ASSEMBLAGE AT 28 DAYS (f'm) SHALL BE 1500 PSI.

5. BEFORE BLOCK IS PLACED ON CONCRETE, THOROUGHLY CLEAN CONCRETE OF ALL LAITANCE AND ALL LOOSE MATERIAL. ROUGHEN AS IN A CONCRETE CONSTRUCTION JOINT.

6. PLACE ALL HORIZONTAL BARS IN BOND BEAM UNITS. WHEN 2 BARS ARE USED, STAGGER LAPS A MINIMUM OF 5'–0". VERTICAL REINFORCING SHALL BE HELD IN POSITION AT TOP AND BOTTOM AND AT INTERVAL NOT EXCEEDING 200 BAR DIAMETERS. TIE LAP SPLICE TO DOWEL BAR, IF REBAR POSITIONER IS NOT USED NEAR THE DOWEL BAR.

7. ALL EMBEDDED ITEMS (BOLTS, ETC.) SHALL BE SECURED IN PLACE PRIOR TO GROUTING. PROVIDE A MINIMUM OF 1" GROUT AROUND ALL BOLTS IN MASONRY.

8. CLEAN ALL CELLS AND BOND BEAMS OF EXCESSIVE MORTAR PROTRUSIONS AND OTHER DEBRIS BEFORE GROUTING.

9. MAXIMUM GROUT POUR WITHOUT CLEANOUT IS 5'–4" IN BLOCK WALL. WHEN GROUT POUR IS MORE THAN 5'–4" HIGH, CLEANOUTS SHALL BE AT EVERY VERTICAL BAR BUT NOT MORE THAN 32" O.C. IF REQUIRED, CLEANOUTS SHALL NOT BE SEALED BEFORE INSPECTION. THE THICKNESS OF GROUT BETWEEN BLOCK AND REINFORCING STEEL SHALL NOT BE LESS THAN 1/2", AND BETWEEN PARALLEL BARS NOT LESS THAN 3/4".

10. ALL CELLS SHALL BE SOLIDLY FILLED WITH GROUT.

11. WHEN GROUTING IS STOPPED FOR A PERIOD OF ONE HOUR OR LONGER, FORM HORIZONTAL CONSTRUCTION JOINTS BY STOPPING THE GROUT POUR 1.5 INCHES MINIMUM BELOW THE UPPER–MOST UNIT, EXCEPT AT TOP OF WALL.

12. WHEN SHOWN ON THE DRAWING, CONTROL JOINTS SHALL BE PLACED NOT LESS THAN 24" FROM A BEARING PLATE OR JAMB OF AN OPENING. PLACE BOND BEAM REINFORCING CONTINUOUS THROUGH EXPANSION AND CONTROL JOINTS, WRAPPING BARS WITH 1/8" THICK BOND BREAKING TAP 24" ON BOTH SIDES OF JOINT. DO NOT SPLICE BOND BEAM REINFORCING WITHIN 6'–0" OF AN EXPANSION OR CONTROL JOINT. LOCATION OF CONTROL JOINTS SHOULD BE COORDINATED WITH THE ENGINEER.

13. THE CONTRACTOR SHALL LOCATE CONSTRUCTION JOINTS SO AS NOT TO IMPAIR THE STRENGTH OF THE STRUCTURE AND TO MINIMIZE SHRINKAGE STRESSES.

14. WALLS SHALL BE CONSTRUCTED IN CONVENTIONAL RUNNING BOND, UNLESS OTHERWISE NOTED.

PREFABRICATED WOOD TRUSSES

1. PREFABRICATED WOOD TRUSSES SHALL CONFORM TO THE "DESIGN SPECIFICATION FOR LIGHT METAL PLATE CONNECTED WOOD TRUSSES" AS ADOPTED BY THE TRUSS PLATE INSTITUTE.

2. CONNECTOR PLATES SHALL BE PRIME COMMERCIAL QUALITY GALVANIZED STEEL SHEETS NO LESS THAN 20 GAGE THICKNESS.

3. ALL TRUSSES SHALL SATISFY STRESS AND DEFLECTION REQUIREMENTS. ALLOWABLE TOTAL LOAD DEFLECTON SHALL BE SPAN/240, BUT NOT MORE THAN 1".

4. WEB CONFIGURATION SHOWN ON ELEVATIONS ARE SCHEMATIC ONLY. TRUSS WEBS LESS THAN 7'–9" SHALL BE DESIGNED WITHOUT INTERIOR BRACE.

5. UNLESS NOTED OTHERWISE, ALL TRUSS TOP CHORDS SHALL BE ASSUMED TO BE 2x6. TRUSS FABRICATOR/DESIGNER SHALL VERIFY ADEQUACY OF THIS ASSUMPTION. ALL WEBS AND BOTTOM CHORDS SHALL BE AS REQUIRED TO SATISFY STRESS AND DEFLECTION CRITERIA. TRUSS FABRICATOR/DESIGNER SHALL VERIFY ALL TRUSS SIZES, DIMENSIONS AND RAFTER SLOPES WITH ARCHITECTURAL DRAWINGS.

6. TRUSS MANUFACTURER SHALL FOLLOW TRUSS LAYOUT PLANS AS SHOWN IN THESE STRUCTURAL DRAWINGS. DEVIATIONS FROM THE ILLUSTRATED LAYOUT WILL NOT BE ACCEPTED.

7. SUBMITTAL:
   A. LAYOUT PLAN FOR TRUSSES WITH PROPER DESIGNATIONS THAT IDENTIFY TRUSSES ON LAYOUT PLAN WITH SUBMITTED CALCULATIONS.

   B. FABRICATION AND ERECTION DRAWINGS SHOWING ALL MEMBER SIZES, CONNECTOR PLATES, PLATE DIMENSIONS, BRACING, AND CAPACITIES.

   C. DESIGN CALCULATIONS, STAMPED BY A STRUCTURAL ENGINEER REGISTERED IN THE STATE OF HAWAII.

   D. ALL SUBMITTALS SHALL BE REVIEWED PRIOR TO STARTING FABRICATION.

8. TRUSS MANUFACTURER SHALL BE FULLY RESPONSIBLE FOR THE DESIGN, FABRICATION AND SUPPLY OF ALL TRUSSES, AND TRUSS–TO–TRUSS CONNECTIONS.

9. FOR ADDITIONAL CORROSION PROTECTION, ALL TRUSS CONNECTOR PLATES SHALL BE SHOP PAINTED WITH ONE COAT OF HIGH ZINC PRIMER AND ONE COAT OF HIGH PERFORMANCE EPOXY PAINT.

WOOD

1. ALL NEW FRAMING LUMBER SHALL BE DOUGLAS FIR, GRADED BY WCLIB, AS FOLLOWS:

TRUSS MEMBERS	PER TRUSS DESIGNER
JOISTS (2" WIDE)	NO. 1
BEAM (GREATER THAN 2" WIDE)	NO. 1
POSTS	NO. 1
STUDS	NO. 2

2. SPECIE AND GRADES NOTED ABOVE ARE THE MINIMUM REQUIRED: REFER TO PROJECT SPECIFICATIONS OR ARCHITECTURAL DRAWINGS FOR TIMBERS EXPOSED TO VIEW, ELEMENTS, ETC.

3. MINIMUM NAILING SHALL COMPLY WITH TABLE 2304.9.1 OF THE I.B.C. U.O.N. ON THE PLANS.
   ALL NAILS SHALL BE GALVANIZED / 316 STAINLESS COMMON BOX NAILS.

4. ALL BOLTS SHALL BE GALVANIZED/316SS. BOLT HOLES SHALL BE A MAX. OF 1/16" LARGER DIAMETER THAN NOMINAL SIZE OF BOLT USED. RETIGHTEN ALL NUTS PRIOR TO CLOSING IN. STANDARD GALVANIZED/316SS CUT WASHERS SHALL BE USED UNDER BOLT HEADS AND NUTS AGAINST WOOD.

5. DO NOT BORE OR NOTCH JOISTS, RAFTERS OR BEAMS, EXCEPT WHERE SHOWN IN DETAILS. OBTAIN ARCHITECT'S APPROVAL FOR ANY HOLES OR NOTCHES NOT DETAILED.

6. ALL CONNECTOR REFERENCES AND FRAMING HARDWARE SHALL BE SIMPSON "STRONG TIE" CONNECTORS OR APPROVED STRUCTURAL EQUIVALENT. ALL CONNECTORS SHALL BE HOT–DIP GALVANIZED/316 SS WITH GALVANIZED/316SS NAILS, WHEN AVAILABLE FROM MANUFACTURER. CONNECTOR HARDWARE THAT IS NOT AVAILABLE IN GALV/316 SS SHALL BE GALVANIZED IF AVAILABLE, OR HAVE SIMPSON ZMAX FINISH, U.N.O. HARDWARE SHALL BE INSTALLED WITH NAILS OR BOLTS AS INDICATED IN THE MANUFACTURER'S CATALOG. WHERE NAIL HOLES AND BOLT HOLES HAVE BEEN PROVIDED, USE NAILS UNLESS OTHERWISE NOTED.

7. ALL WOOD AND PLYWOOD PRODUCTS SHALL BE PRESSURE–PRESERVATIVE–TREATED.

8. WOOD GLUE: APA AFG–01 WATERPROOF, WATERBASE, AIR CURE TYPE.

9. GLU–LAMINATED MEMBERS SHALL HAVE THE FOLLOWING MINIMUM ALLOWABLE UNIT STRESSES:

	GLB	/ ROSBORO BIG BEAM
EXTREME FIBER IN BENDING.	2400 PSI	3000 PSI
HORIZONTAL SHEAR.	165 PSI	300 PSI
COMPRESSION PERPENDICULAR TO GRAIN. .	450 PSI	650 PSI
MODULUS OF ELASTICITY.	1,800,000 PSI . . .	2,100,000 PSI

10. INSTALL 30# FELT BETWEEN ALL WOOD MEMBERS AND CONCRETE.

11. FOR JOISTS UNDER 12' LONG, NO BLOCKING IS REQUIRED. FOR JOISTS BETWEEN 12' AND 16' LONG, 1 ROW OF BLOCKING AT THE MIDPOINT IS REQUIRED. FOR JOISTS OVER 16' LONG, 2 ROWS OF BLOCKING IS REQUIRED AT THIRD POINTS.

12. ALL WOOD SHALL BE FIELD PAINTED AS FOLLOWS: APPLY PRIME COAT OF ZINSSER COVER–STAIN OIL BASED PRIMER FOLLOWED BY 2 FINISH COATS OF SHERWIN–WILLIAMS A–100 EXTERIOR ACRYLIC LATEX GLOSS PAINT. COORDINATE COLOR SELECTION WITH OWNER AND APPLY PAINT PER MANUFACTURERS' INSTRUCTIONS AND RECOMMENDATIONS.

Engineering Partners, Inc.
Progressive Solutions
455 E.LANIKAULA STREET
HILO, HAWAII, 96720
www.epintegrated.com

YEN WEN FANG
LICENSED PROFESSIONAL ENGINEER
Exp. 04/30/14
No. 9361–S
HAWAII, U.S.A.

THIS WORK WAS PREPARED BY ME OR UNDER MY SUPERVISION, CONSTRUCTION OF THIS PROJECT WILL BE UNDER MY OBSERVATION.
SIGNATURE

MARK	DATE	DESCRIPTION
2	2014–5–7	ADD. 6: CONC. TYPE CHANGED

REVIEWED:

DEPARTMENT OF PARKS AND RECREATION DATE

COUNTY OF HAWAI'I
DEPARTMENT OF PARKS & RECREATION
101 PAUAHI STREET; SUITE 6 / HILO, HAWAII 96720 / PHONE: 808.961.8311 / FAX: 808.961.8411

PAHOA PARK MASTER PLAN
PHASE I - BID SUBMITTAL 2014-02-10

JOB NO.: PR-4234 PAHOA, PUNA, HAWAII TMK: (3) 1-5-002:020

PLAN SHEET DESCRIPTION: COMFORT STATION - STRUCTURAL NOTES

DESIGNED BY: JTB
DRAWN BY: JTB
CHECKED BY: YWF

SHEET NO.
S-CS001

OF SHEETS

DATE: 2014–02–10

SPECIAL INSPECTION:

1. CONTRACTOR SHALL BE RESPONSIBLE FOR ENSURING THAT SPECIAL INSPECTION OF PORTIONS OF THE WORK , AS REQUIRED BY THE BUILDING CODE OF THE COUNTY OF HAWAII, BE MADE AT THE APPROPRIATE TIME. THE CONTRACTOR SHALL GIVE TIMELY NOTICE OF WHEN AND WHERE INSPECTIONS ARE TO BE MADE AND PROVIDE ACCESS FOR THE INSPECTOR. THE CONTRACTOR SHALL CORRECT DEFECTIVE WORK AT NO ADDITIONAL COST TO THE OWNER AND THE CONTRACTOR SHALL PAY FOR RE-INSPECTION.

2. CONTRACTOR IS RESPONSIBLE TO RETAIN LICENSED SPECIAL INSPECTORS IN COUNTY OF HAWAII TO PERFORM ALL SPECIAL INSPECTIONS REQUIRED AS LISTED BELOW. SPECIAL INSPECTOR SHALL SUBMIT INSPECTION REPORT WITHIN 3 DAYS OF INSPECTION AND PRIOR TO ACCEPTANCE OF THE WORK

3. THE FOLLOWING IS A SUMMARY OF THE SPECIAL INSPECTION REQUIREMENTS:

INSPECTION OF WOOD TRUSS FABRICATORS	YES, PER IBC 1704.2
HIGH STRENGTH STEEL BOLTS	NO, NONE USED IN DESIGN
WELDING	NO, NONE USED IN DESIGN
CONCRETE REINFORCING STEEL & FORMWORK	YES, PER IBC TABLE 1704.4
ANCHOR BOLTS (RODS) IN CONCRETE	YES, PER IBC TABLE 1704.4
CONCRETE POUR	NO PER IBC 1704.4.2.3, DESIGN BASED ON 2,500 PSI CONCRETE ALTHOUGH 3,000 PSI IS SPECIFIED FOR CONSTRUCTION
CONCRETE CYLINDER TEST	NO, SUPPLIER TO PROVIDE IN-HOUSE TEST RESULTS
CONCRETE MASONRY	YES, PER IBC 1704.5
SOILS	NO, CONTROLLED FILL IS LESS THAN 12" THICK
WOOD CONSTRUCTION	NO, NO HIGH LOAD DIAPHRAGMS USED IN DESIGN
SEISMIC RESISTANCE	YES, PER IBC 1705.3 YES,

PERIODIC SPECIAL CASES: EPOXY ANCHORS & DOWELS

COLD FORMED STEEL FRAMING

2

1. COLD-FORMED STEEL FRAMING SHALL BE DETAILED, FABRICATED AND ERECTED IN ACCORDANCE WITH THE LATEST EDITION OF THE FOLLOWING DESIGN STANDARDS:
   A. "AISI SPECIFICATION FOR THE DESIGN OF COLD-FORMED STEEL STRUCTURAL MEMBERS"
   B. "ASTM C1007 "STANDARD SPECIFICATION FOR INSTALLATION OF LOAD BEARING STEEL STUDS AND RELATED ACCESSORIES"
   C. AWS D.1.3 "STRUCTURAL WELDING CODE - SHEET STEEL"

2. COLD-FORMED STEEL FRAMING REFERENCES ARE FROM THE STEEL STUD MANUFACTURERS ASSOCIATION (SSMA) AND ARE CONSISTENT WITH THE NOTATION BELOW:

MEMBER DEPTH (1/100 INCHES):
(EX: 6" -> 600)
FOR ALL "T" SECTIONS, MEMBER DEPTH IS THE INSIDE TO INSIDE DIMENSION.

FLANGE WIDTH (1/100 INCHES):
(EX 1 5/8" = 1.625 -> 162)

600 S 162 - 54

STYLE:
S = STUD OR JOIST SECTIONS
T = TRACK SECTIONS
U = CHANNEL SECTIONS
F = FURRING CHANNEL SECTIONS
HDS = DIETRICH HEADER SECTION

MATERIAL THICKNESS
27 = 22 GA. 54 = 16 GA.
33 = 20 GA. 68 = 14 GA.
43 = 18 GA. 97 = 12 GA.

3. COLD-FORMED STEEL FRAMING MATERIALS SHALL CONFORM TO THE FOLLOWING MINIMUM SPECIFICATIONS, LATEST EDITION:
   A. 18 GA. AND LIGHTER . . . . . ASTM A653 SS GRADE 230 OR ASTM A1011 SS GRADE 230
   B. 16 GA. AND HEAVIER . . . . ASTM A653 SS GRADE 340, CLASS 1 OR 3 OR ASTM A1011 SS GRADE 340

4. CONNECTIONS FOR COLD-FORMED STEEL SHALL CONFORM TO THE "AISI FASTENERS FOR RESIDENTIAL STEEL FRAMING RG-933," LATEST EDITION INCLUDING THE FOLLOWING:
   A. SELF DRILLING SCREWS: ASTM C1002 TYPE S /ASTM C954 TYPE S-12
   B. BOLTS, NUTS AND WASHERS: . . . . . ASTM A90
   C. WELDED CONNECTIONS SHALL CONFORM TO AWS D1.3 E60 AND BE MADE IN THE SHOP. MEMBERS WITH BURN THRUS SHALL BE REPLACED OR REPAIRED.

5. PROVIDE ADEQUATE MEASURES TO ENSURE THE CORROSION RESISTANCE OF THE STEEL MATERIALS AND FASTENERS. GALVANIZED COATINGS SHALL CONFORM TO ASTM C955, G60 MINIMUM. WELD AREAS SHALL BE RE-TOUCHED WITH THE APPROPRIATE PAINT OR COLD GALVANIZING TO RETAIN CORROSION RESISTANCE.

6. ALL COLD ROLLED STEEL STUDS, JOIST AND TRACK MILL CERTIFIED STEEL TO MEET: SSMA ICBO # ER-4943P
   A. ASTM A446-GRADE D 14 AND 16 GA. GALV. STEEL, Fy = 50 ksi.
   B. ASTM A446-GRADE A 25 - 18 GA. GALV. STEEL, Fy = 33 ksi.

7. ALL STEEL STUDS, JOIST AND TRACK SHALL HAVE A LEGIBLE LABEL, STAMP OR EMBOSSMENT, AT A MAXIMUM OF 48" O.C. INDICATING THE MANUFACTURER'S NAME, LOGO OR INITIALS, ICBO EVALUATION SERVICE REPORT NUMBER, THE MATERIAL BASE METAL THICKNESS (UNCOATED) IN .001 in. AND THE YIELD STRENGTH IF DIFFERENT THAN 33 ksi.

ABBREVIATIONS

A.B.	ANCHOR BOLT
ALT.	ALTERNATE
APPROX.	APPROXIMATE
ARCH.	ARCHITECTURAL
(B)	BOTTOM (REINFORCEMENT)
BLDG.	BUILDING
BM.	BEAM
B.O.F.	BOTTOM OF FOOTING
BOT.	BOTTOM
C.I.P.	CAST-IN-PLACE
CL.	CENTERLINE
CLR.	CLEAR(ANCE)
CMU	CONCRETE MASONRY UNIT
COL.	COLUMN
CONC.	CONCRETE
CONN.	CONNECTION
CJP	COMPLETE JOINT PENETRATION
CONSTR.	CONSTRUCTION
CONT.	CONTINUOUS
CRM	CUT ROCK MASONRY
DBL	DOUBLE
DET.	DETAIL
DIA.	DIAMETER
DIM.	DIMENSION
DWG.	DRAWING
EA.	EACH
E.F.	EACH FACE
E.J.	EXPANSION JOINT
ELEV.	ELEVATION
EQ.	EQUAL
EQUIPT	EQUIPMENT
E.S.	EACH SIDE
E.W.	EACH WAY
EXP.	EXPANSION
EXT.	EXTERIOR
EXIST.	EXISTING
FDN.	FOUNDATION
FL.	FLOOR
F.O.C.	FACE OF CONCRETE
FIN.	FINISH
FIN. FL.	FINISH FLOOR
FT.	FOOT TO FEET
FTG.	FOOTING
GA.	GAUGE
GALV.	GALVANIZED
(H)	HORIZONTAL(REINFORCEMENT)
HK.	HOOK
HORIZ.	HORIZONTAL
I.D.	INSIDE DIAMETER(DIMENSION)
INFO.	INFORMATION
INT.	INTERIOR
INTERM.	INTERMEDIATE
JT.	JOINT
LLV	LONG LEG VERTICAL
LONG.	LONGITUDINAL
MAX.	MAXIMUM
M.B.	MACHINE BOLT
MECH.	MECHANICAL
MIN.	MINIMUM
MISC.	MISCELLANEOUS
N.I.C.	NOT IN CONTRACT
NO. OR #	NUMBER
N.T.S.	NOT TO SCALE
O.C.	ON CENTER
O.D.	OUTSIDE DIAMETER
O.F.	OUTSIDE FACE
O.H.	OPPOSITE HAND
OPNG.	OPENING
OPP.	OPPOSITE
PJP	PARTIAL JOINT PENETRATION
PL.	PLATE
PWD.	PLYWOOD
PREFAB.	PREFABRICATION
PT.	POINT
REF.	REFERENCE
R.O.	ROUGH OPENING
RAD.	RADIUS
REINF.	REINFORCED, REINFORCEMENT
REQ'D	REQUIRED
SCHED.	SCHEDULE
SECT.	SECTION
SHT.	SHEET
SIM.	SIMILAR
SL.	SLOPE
S.O.G.	SLAB - ON - GRADE
SPECS.	SPECIFICATIONS
SQ.	SQUARE
S.S.	STAINLESS STEEL
STD.	STANDARD
STIFF.	STIFFENER
STRUCT.	STRUCTURAL
SYM.	SYMMETRICAL
(T)	TOP (REINFOREMENT)
T & B	TOP & BOTTOM
T. & G.	TONGUE AND GROOVE
THRU	THROUGH
T.O.F.	TOP OF FOOTING
T.O.S.	TOP OF SLAB, TOP OF STEEL
T.O.W.	TOP OF WALL
TRANSV.	TRANSVERSE
TYP.	TYPICAL
U.O.N.	UNLESS OTHERWISE NOTED
(V)	VERTICAL (REINFORCEMENT)
VERT.	VERTICAL
W/	WITH
WD.	WOOD
W.W.F.	WELDED WIRE FABRIC
LLH	LONG LEG HORIZONTAL

NOTE:
NOT ALL ABBREVIATIONS ARE NECESSARILY USED

Engineering Partners, Inc.
Progressive Solutions
455 ELANIKAULA STREET
HILO, HAWAII, 96720
www.epintegrated.com

YEN WEN FANG
LICENSED PROFESSIONAL ENGINEER
Exp. 04/30/14
No. 9361-S
HAWAII, U.S.A.

THIS WORK WAS PREPARED BY ME OR UNDER MY SUPERVISION, OVERSIGHT OR THIS PROJECT WILL BE UNDER MY OBSERVATION.

SIGNATURE

MARK	DATE	DESCRIPTION
2	2014-5-7	MOD. 6: ADDED NOTES FOR COLD FORMED STEEL CONSTRUCTION

REVIEWED:

DEPARTMENT OF PARKS AND RECREATION — DATE

COUNTY OF HAWAII
DEPARTMENT OF PARKS & RECREATION
101 PAUAHI STREET 1, SUITE 6 / HILO, HAWAII 96720 / PHONE: 808.961.8311 / FAX: 808.961.8411

PAHOA PARK MASTER PLAN
PHASE I - BID SUBMITTAL 2014-02-10

JOB NO.: PR-4234 — PAHOA, PUNA, HAWAII — TMK: (3) 1-5-002:020

PLAN SHEET DESCRIPTION: COMFORT STATION - STRUCTURAL NOTES

DESIGNED BY: JTB
DRAWN BY: JTB
CHECKED BY: YWF

SHEET NO. S-CS002 OF SHEETS

DATE: 2014-02-10

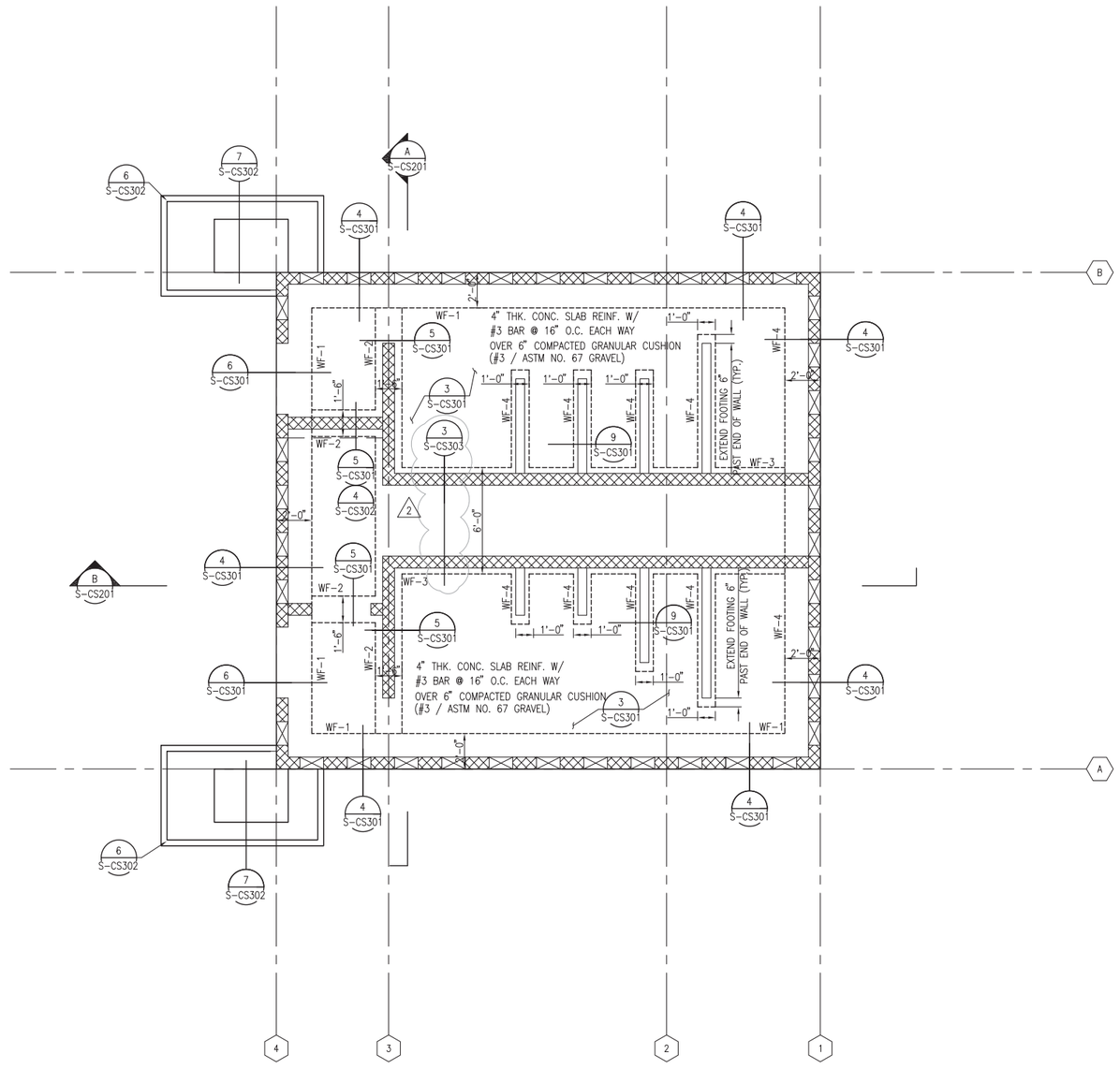

A COMFORT STATION - FOUNDATION PLAN

SCALE: 1/4" = 1'-0"

0 4' 8'

FOOTING SCHEDULE

2

FOOTING MARK	SIZE "W" WIDTH	SIZE "L" LENGTH	SIZE "T" THICKNESS	ELEVATION B.O.F.	ELEVATION T.O.F.	LONGITUDINAL REINFORCING "c"	REFERENCE DETAIL OR SECTION
WF-1	2'-0"	PER PLAN	1'-6"	692.33'	693.83'	(4) #4 BARS AT BOTTOM	4,6/S-CS301
WF-2	1'-6"	PER PLAN	1'-0"	692.83'	693.83'	(3) #4 BARS AT BOTTOM	5/S-CS301
WF-3	6'-0"	PER PLAN	1'-0"	692.83'	693.83'	#4 BARS AT 12" O.C. BOTHWAYS AT BOTTOM	3/S-CS303
WF-4	1'-0"	PER PLAN	1'-0"	692.83'	693.83'	(2) #4 BARS AT BOTTOM	9/S-CS301

LEGEND

- FOOTING
- FULL HEIGHT CMU WALL
- CMU WALL
- NON-BEARING FURRING WALL

Engineering Partners, Inc.
Progressive Solutions
455 ELANIKAULA STREET
HILO, HAWAII, 96720
www.epintegrated.com

YEN WEN FANG
LICENSED PROFESSIONAL ENGINEER
Exp. 04/30/14
No. 9361-S
HAWAII, U.S.A.

THIS WORK WAS PREPARED BY ME OR UNDER MY SUPERVISION, CONSTRUCTION OF THIS PROJECT WILL BE UNDER MY OBSERVATION.

SIGNATURE

MARK	DATE	DESCRIPTION
2	2014-5-7	ADD. 6: DETAIL REFERENCE FOR FOOTING WF-3 CHANGED TO 4/S-CB101

REVIEWED:

DEPARTMENT OF PARKS AND RECREATION

DATE

COUNTY OF HAWAII
DEPARTMENT OF PARKS & RECREATION
101 PAUAHI STREET, SUITE 6 / HILO, HAWAII 96720 / PHONE: 808.961.8311 / FAX: 808.961.8411

PAHOA PARK MASTER PLAN
PHASE I - BID SUBMITTAL 2014-02-10

JOB NO.: PR-4234

PAHOA, PUNA, HAWAII

TMK: (3) 1-5-002:020

PLAN SHEET DESCRIPTION: COMFORT STATION - FOUNDATION PLAN

DESIGNED BY: JTB
DRAWN BY: JTB
CHECKED BY: YWF

SHEET NO. S-CS101 OF SHEETS

DATE: 2014-02-10

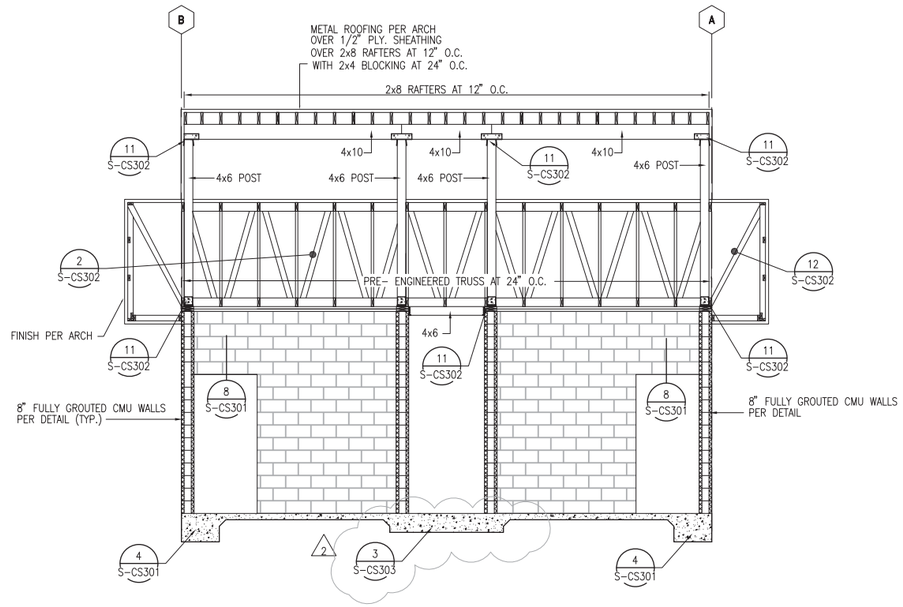

A COMFORT STATION - BUILDING SECTION

SCALE: 1/4" = 1'-0" 0 4' 8'

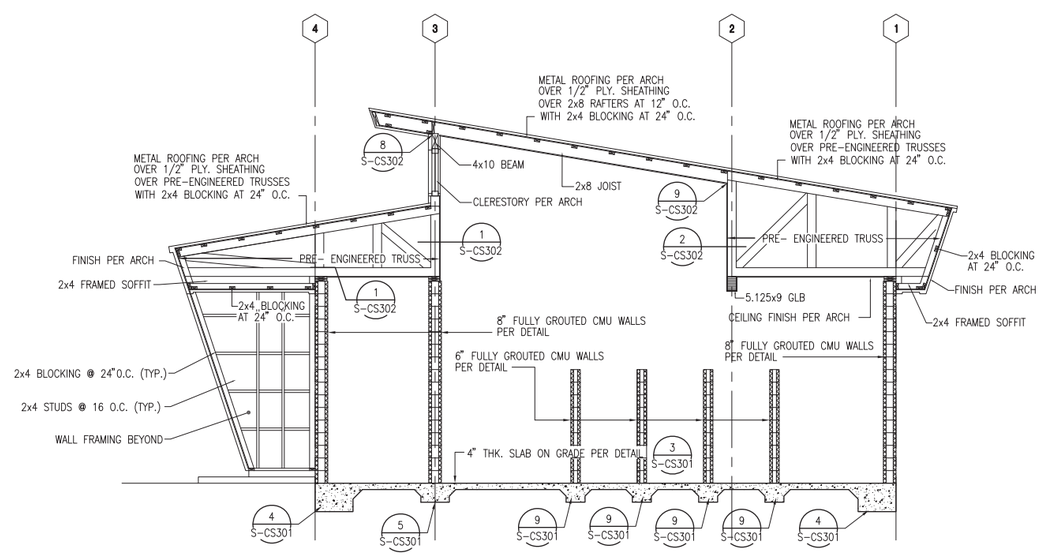

B COMFORT STATION - BUILDING SECTION

SCALE: 1/4" = 1'-0" 0 4' 8'

Engineering Partners, Inc.
Progressive Solutions
455 ELANIKAULA STREET
HILO, HAWAII, 96720
www.epintegrated.com

YEN WEN FANG
LICENSED PROFESSIONAL ENGINEER
Exp. 4/30/14
No. 9361-S
HAWAII, U.S.A.

THIS WORK WAS PREPARED BY ME OR UNDER MY SUPERVISION, CONSTRUCTION OF THIS PROJECT WILL BE UNDER MY OBSERVATION.

SIGNATURE

MARK	DATE	DESCRIPTION
1	2014-4-10	ADD. 3: FRAMING FOR LEG AT FRONT OF BUILDING ADDED
2	2014-5-7	ADD. 6: FOOTING AT CENTER OF SECTION B REVISED

REVIEWED:

DEPARTMENT OF PARKS AND RECREATION DATE

COUNTY OF HAWAI'I
DEPARTMENT OF PARKS & RECREATION
101 PAUAHI STREET, SUITE 6 / HILO, HAWAII 96720 / PHONE: 808.961.8311 / FAX: 808.961.8411

PAHOA PARK MASTER PLAN
PHASE I - BID SUBMITTAL 2014-02-10

JOB NO.: PR-4234 PAHOA, PUNA, HAWAII TMK: (3) 1-5-002:020

PLAN SHEET DESCRIPTION: COMFORT STATION - BUILDING SECTIONS

DESIGNED BY: JTB
DRAWN BY: JTB
CHECKED BY: YWF

SHEET NO. S-CS201
OF SHEETS

DATE: 2014-02-10

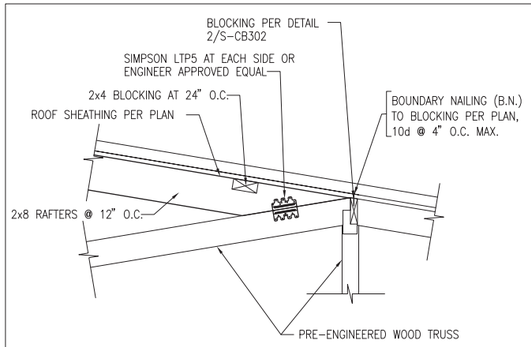

10 2x8 RAFTER TO TRUSS DETAIL
NOT TO SCALE

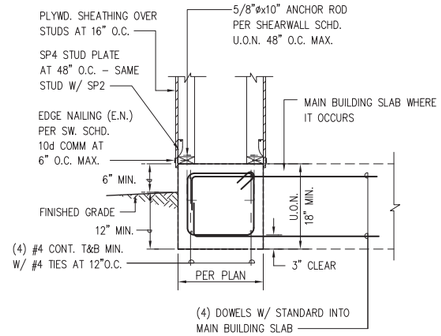

NOTE:
FOOTING SHALL BE POURED MONOLITHICLY WITH MAIN BUILDING SLAB

7 TYP. EXT. STUD WALL FOOTING
NOT TO SCALE

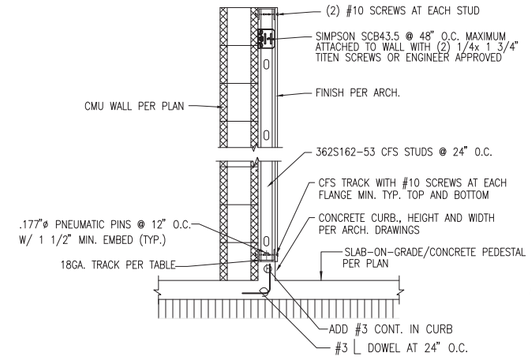

4 CFS FURRING WALL FRAMING
NOT TO SCALE

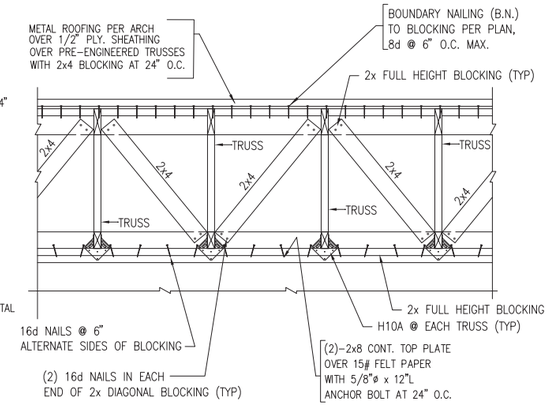

1 TRUSS BLOCKING DETAIL
NOT TO SCALE

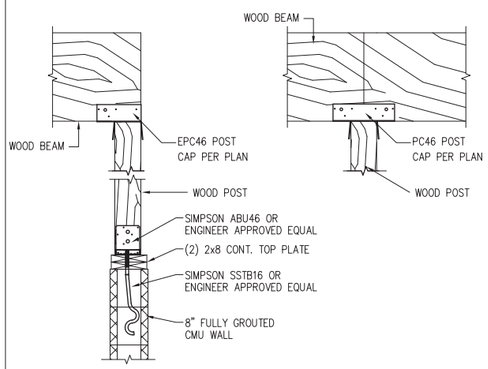

11 WOOD POST CONNECTION DETAIL
NOT TO SCALE

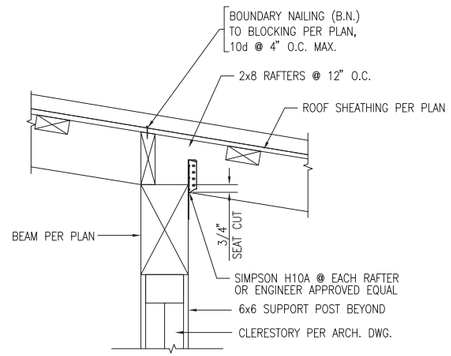

8 2x8 RAFTER TO BEAM CONN.
NOT TO SCALE

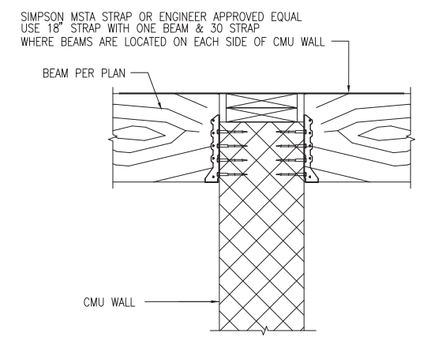

5 BEAM TO CMU WALL DETAIL
NOT TO SCALE

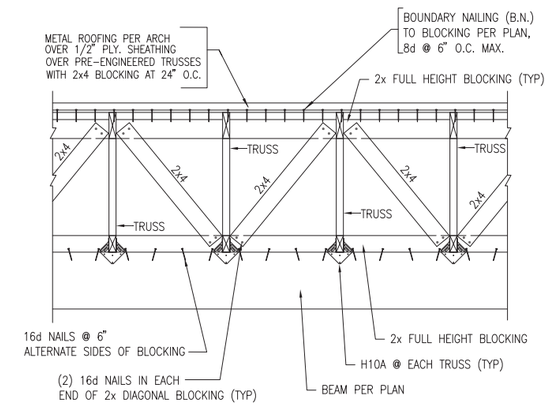

2 TRUSS BLOCKING DETAIL
NOT TO SCALE

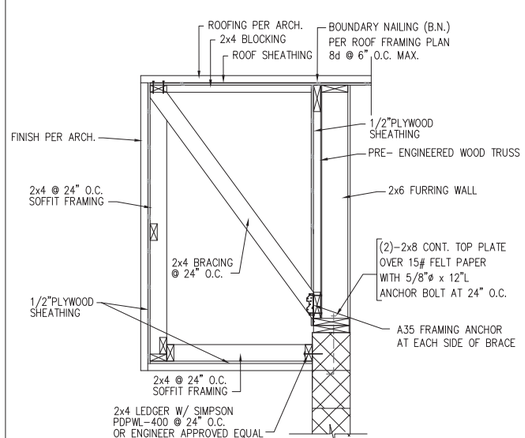

12 GABLE END SOFFIT FRAMING
NOT TO SCALE

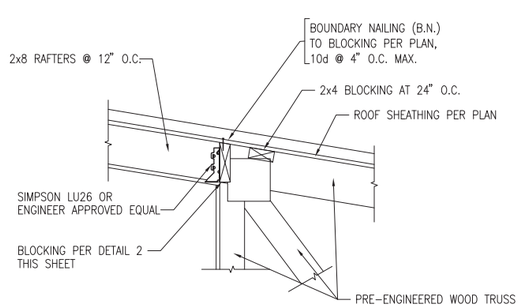

9 2x8 RAFTER TO TRUSS CONN.
NOT TO SCALE

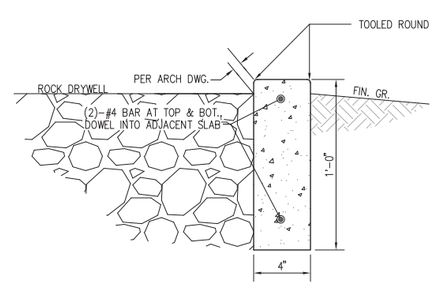

6 ROCK DRYWELL CURB DET.
NOT TO SCALE

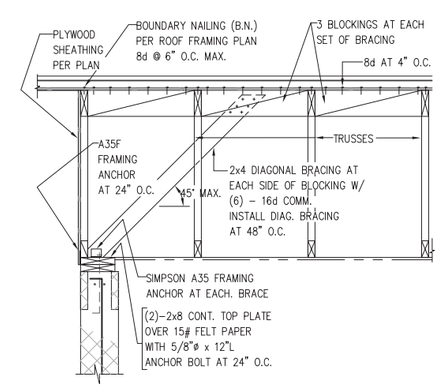

3 GABLE END WALL BRACING
NOT TO SCALE

Engineering Partners, Inc.
Progressive Solutions
455 ELANIKAULA STREET
HILO, HAWAII, 96720
www.epintegrated.com

YEN WEN FANG
LICENSED PROFESSIONAL ENGINEER
Exp. 4/30/14
No. 9361-S
HAWAII, U.S.A.

THIS WORK WAS PREPARED BY ME OR UNDER MY SUPERVISION, CONTROL AND DIRECTION AND WILL BE UNDER MY OBSERVATION.

SIGNATURE

MARK	DATE	DESCRIPTION
1	2014-4-10	ADD. 3: DETAILS 4 & 5 REVISED
2	2014-5-7	ADD. 6: NUMBER FOR DETAIL 10 CORRECTED

REVIEWED:
DEPARTMENT OF PARKS AND RECREATION
DATE

COUNTY OF HAWAII
DEPARTMENT OF PARKS & RECREATION
101 PAUAHI STREET, SUITE 6 / HILO, HAWAII 96720 / PHONE: 808.961.8311 / FAX: 808.961.8411

PAHOA PARK MASTER PLAN
PHASE I - BID SUBMITTAL 2014-02-10

JOB NO.: PR-4234
PAHOA, PUNA, HAWAII
TMK: (3) 1-5-002:020

PLAN SHEET DESCRIPTION: COMFORT STATION - STRUCTURAL DETAILS

DESIGNED BY: JTB
DRAWN BY: JTB
CHECKED BY: YWF

SHEET NO. S-CS302
OF SHEETS

DATE: 2014-02-10

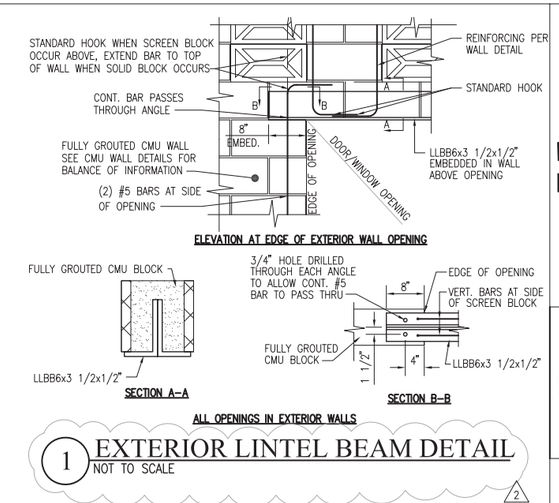

1 EXTERIOR LINTEL BEAM DETAIL
NOT TO SCALE

2

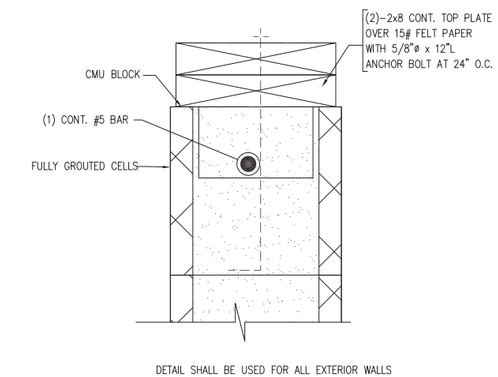

2 TOP OF EXTERIOR WALL DETAIL
NOT TO SCALE

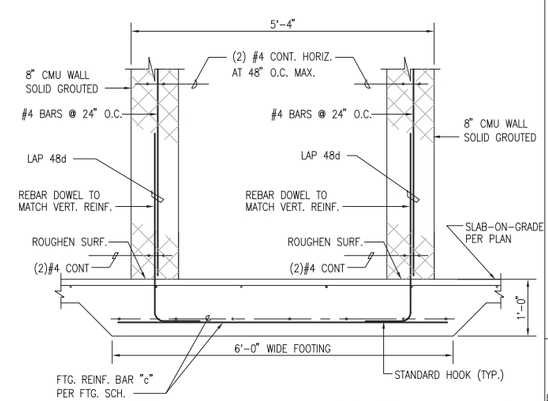

2

3 CMU WALL AND FOOTING DETAIL
NOT TO SCALE

Engineering Partners, Inc.
Progressive Solutions
455 ELANIKAULA STREET
HILO, HAWAII, 96720
www.epintegrated.com

YEN WEN FANG
LICENSED PROFESSIONAL ENGINEER
Exp. 04/30/14
No. 9361-S
HAWAII, U.S.A.

THIS WORK WAS PREPARED BY ME OR UNDER MY SUPERVISION, CONSTRUCTION OF THIS PROJECT WILL BE UNDER MY OBSERVATION.

SIGNATURE

MARK	DATE	DESCRIPTION
2	2014-5-7	ADD. 6: DETAIL 1 REVISED FOR CLARITY, DETAIL 3 ADDED.

REVIEWED:

DEPARTMENT OF PARKS AND RECREATION DATE

COUNTY OF HAWAII
DEPARTMENT OF PARKS & RECREATION
101 PAUAHI STREET, SUITE 6 / HILO, HAWAII 96720 / PHONE: 808.961.8311 / FAX: 808.961.8411

PAHOA PARK MASTER PLAN
PHASE I - BID SUBMITTAL 2014-02-10

JOB NO.: PR-4234 PAHOA, PUNA, HAWAII TMK: (3) 1-5-002:020

PLAN SHEET DESCRIPTION: COMFORT STATION - STRUCTURAL DETAILS

DESIGNED BY: JTB
DRAWN BY: JTB
CHECKED BY: YWF

SHEET NO. S-CS303 OF SHEETS

DATE: 2014-02-10