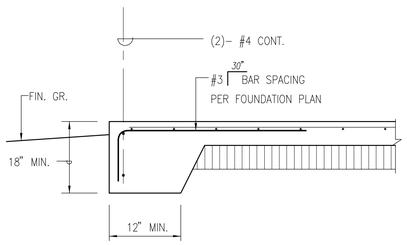

8 SLAB EDGE DETAIL
NOT TO SCALE

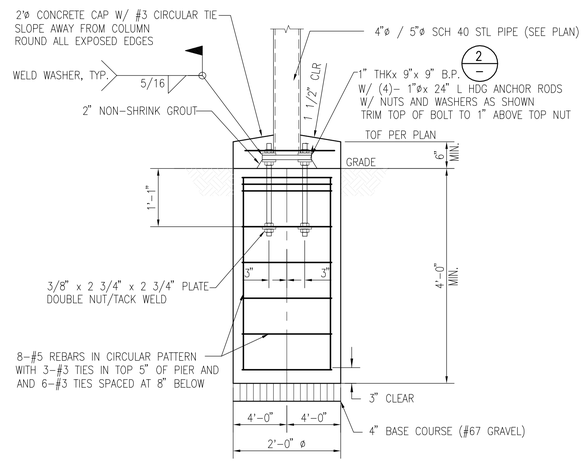

4 DRILLED PIER DETAIL
NOT TO SCALE

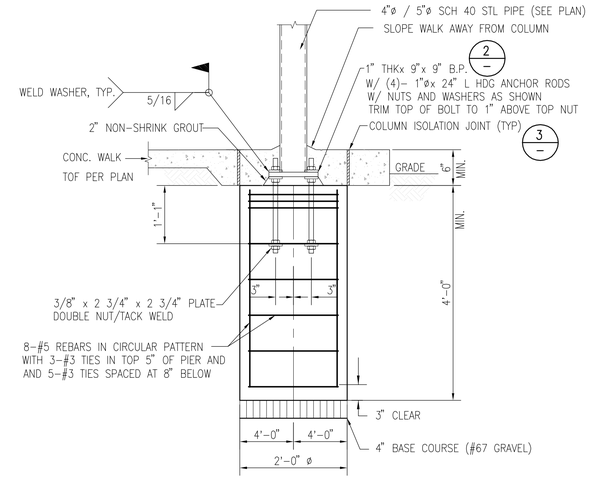

1 DRILLED PIER DETAIL
NOT TO SCALE

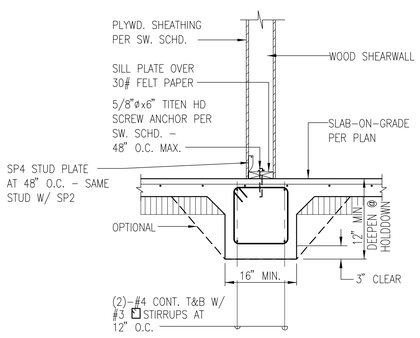

9 INT. SHEARWALL FTG
NOT TO SCALE

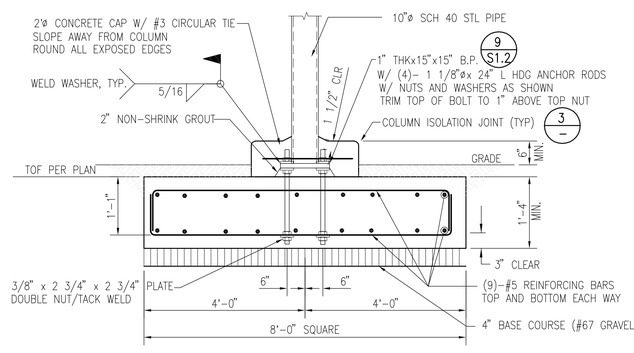

5 SPREAD FOOTING DETAIL
NOT TO SCALE

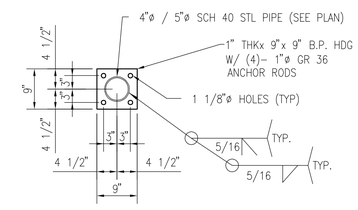

PLAN

2 BASE PLATE DETAIL
NOT TO SCALE

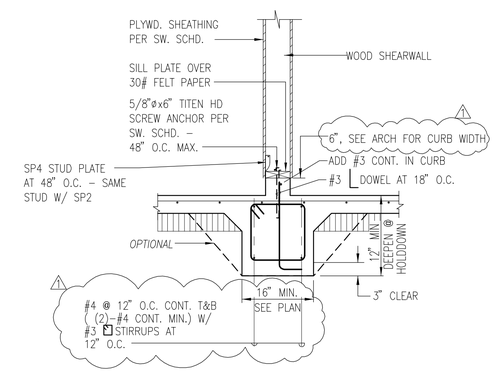

10 INT. SHEARWALL FTG W/ CURB
NOT TO SCALE

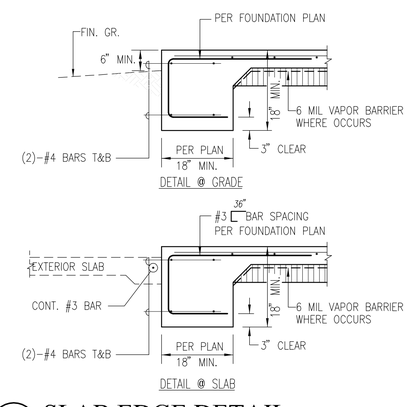

7 SLAB EDGE DETAIL
NOT TO SCALE

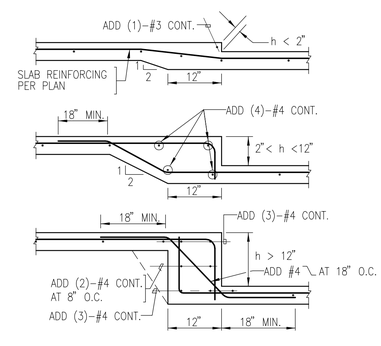

6 DEPRESSED SLAB DETAILS
NOT TO SCALE

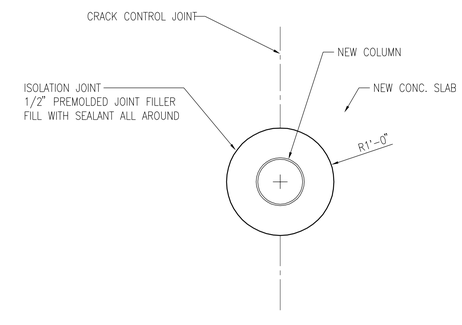

3 COLUMN ISOLATION JT DETAIL
NOT TO SCALE

FLEMING & Associates, LLC
557 MANONO STREET
HILO, HAWAII

LICENSED PROFESSIONAL ENGINEER EXP. 4/30/14 No. 9381-S HAWAII, U.S.A.

THIS WORK WAS PREPARED BY ME OR UNDER MY SUPERVISION. WILL BE UNDER MY OBSERVATION.

SIGNATURE

MARK	DATE	DESCRIPTION
1	11/16/12	ADDENDUM #1

REVIEWED: DEPARTMENT OF PARKS AND RECREATION — DATE

COUNTY OF HAWAI'I
DEPARTMENT OF PARKS & RECREATION
101 PAUAHI STREET, SUITE 6 | HILO, HAWAII 96720 | PHONE: 808.961.8311 | FAX: 808.961.8411

EDITH KANAKA'OLE MULTI-PURPOSE STADIUM BUILDING ADDITION & IMPROVEMENTS

HILO, HAWAII

TMK: (3) 2-2-33: 001

JOB NO.: PR-4166

PLAN SHEET DESCRIPTION: STRUCTURAL DETAILS

DESIGNED BY: MAF
DRAWN BY: MAF
CHECKED BY: YWF

SHEET NO. S1.3

___ OF ___ SHEETS

DATE: OCTOBER, 2012

S:\FLA\PRODUCTION\Projects\12010.00 COH – Ho'olulu, Edith Kanaka'ole Multi-Purpose Stadium Bldg Addition & Improvements\3.00 Design\3.01 Basis Design\3.01.2 Design Development Phase

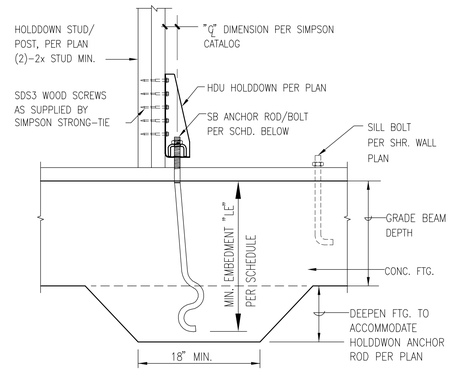

7 TYPICAL HOLDDOWN DETAIL
NOT TO SCALE

SIMPSON HOLDDOWN SCHEDULE PER SIMPSON STRONG-TIE COMPANY INC. CATALOG.						
NAME	SDS SCREWS	ANCHOR BOLT		ANCHOR STUD	"℄"	MIN. "LE"
DTT2Z	8-SDS1.5	1/2"ø	EPOXY	(1)-2x	13/16"	6"
HDU2	6-SDS3	5/8"ø	EPOXY	(2)-2x	1-5/16"	8"
HDU2	6-SDS3	5/8"ø	SSTB16	(2)-2x	1-5/16"	13"
HDU4	10-SDS3	5/8"ø	EPOXY	(2)-2x	1-5/16"	8"

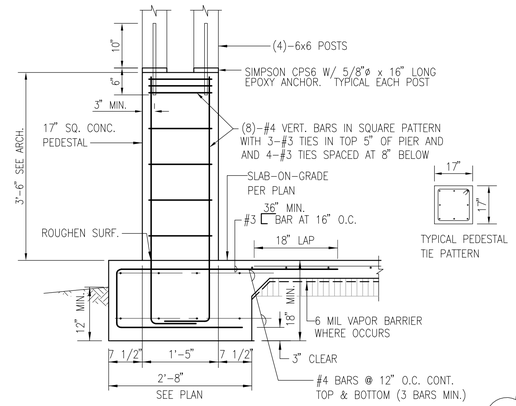

4 PEDESTAL FOOTING DETAIL
NOT TO SCALE

1 DETAIL NOT USED
NOT TO SCALE

NOTE:
1. NOT ALL FASTENERS ARE SHOWN.
2. SILL BOLTS SHALL BE WITHIN 12" OF END OF SILL PLATE.
3. SEE SHEARWALL SCHEDULE FOR EDGE NAILING & FIELD NAILING REQUIREMENT

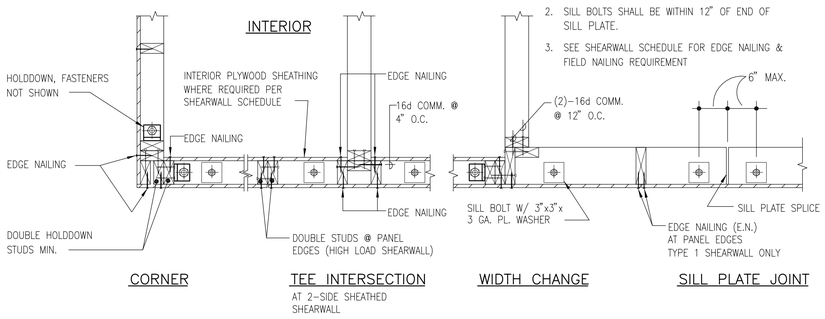

8 TYP STUD WALL FRAMING DETAIL
NOT TO SCALE

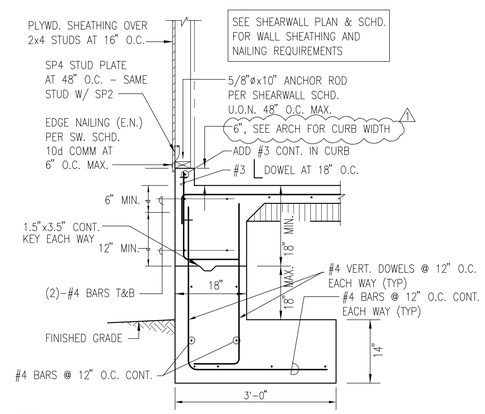

5 RETAINING WALL FOOTING
NOT TO SCALE

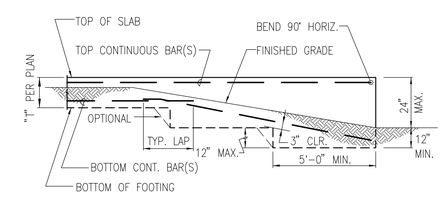

2 DEEPENED FOOTING DETAIL
NOT TO SCALE

TYPE	MATERIAL (BLOCKED)	FACES	NAILS SPACING	SILL PL CON @ FLOOR	LPT PLATE	ANCHOR/ SILL BOLT	SHEAR CAP.#/FT	SILL PL SIZE.
1	5/8"PLY ST 1	1	10D @ 6"	NR	NR	5/8" @ 4'-0"	310	(1)-2x
2	5/8"PLY ST 1	1	10D @ 4"	NR	NR	5/8" @ 3'-0"	510	(1)-3x
3	5/8"PLY ST 1	1	10D @ 3"	NR	NR	5/8" @ 2'-4"	665	(1)-3x

BOLT SIZE	PLATE SIZE
5/8"	1/4"x3"x3"
3/4"	5/16"x3"x3"
5/8"+	5/16"x3"x3"
1"	3/8"x3"x3"

NOTES :

1. ALL STUDS TO BE AT 16" O.C.
2. USE (2)-2x STUDS OR (2)-2x BLOCKING AT ALL ADJOINING PLYWOOD EDGES AND 3x BOTTOM (SILL) PLATE FOR SHEAR WALLS GREATER THAN 310 PLF
3. (2)-2x MEMBERS SHALL BE STITCH NAILED AND CLINCHED WITH 16d NAIL AT 3" O.C. (SEE DETAIL 5 ON S-5)
4. USE MIN. 2x6 STUDS AT PLUMBING WALL(S)
5. THE ANCHOR BOLTS SHALL HAVE AN APPROVED PLATE WASHER UNDER EACH NUT AND THE NUT SHALL BE TIGHTENED JUST PRIOR COVERING THE WALL FRAMING
6. ANCHOR BOLTS SHALL HAVE MIN. 7" EMBEDMENT
7. USE COMMON NAILS OR GALVANIZED BOX NAILS
8. 1/2" EDGE DISTANCE FOR PLYWOOD BOUNDARY NAILING
9. POSITION SILL BOLTS AND HOLD DOWN ANCHOR BOLTS AT PROPER LOCATIONS TO PREVENT CONFLICT WITH STUDS
10. BOUNDARY NAILING FOR ROOF SHEATHING SHALL BE 10d COMM. AT 4" O.C. ALONG BLOCKING AT TRUSS TO WALL/HEADER BEAM CONNECTIONS AND ALONG TOP CHORDS OF DRAG TRUSSES
11. ALL STUDS SHALL BE FULL HEIGHT FROM FLOOR TO CEILING PLATE.

9 SHEAR WALL SCHEDULE
NOT TO SCALE

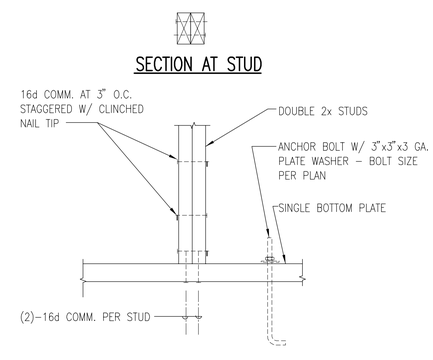

6 (2)-2x FRAMING MEMBERS
NOT TO SCALE

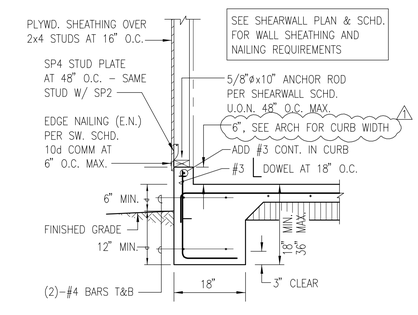

3 TYP. STUD WALL FTG W/ CURB
NOT TO SCALE

FLEMING & Associates, LLC
557 MANONO STREET
HILO, HAWAII

LICENSED PROFESSIONAL ENGINEER EVEN WEN FANG No. 9361-S EXP. 4/30/14 HAWAII, U.S.A.

THIS WORK WAS PREPARED BY ME OR UNDER MY SUPERVISION. CONSTRUCTION OF THIS PROJECT WILL BE UNDER MY OBSERVATION.

SIGNATURE

MARK	DATE	DESCRIPTION
1	11/16/12	ADDENDUM #1

REVIEWED: DATE

DEPARTMENT OF PARKS AND RECREATION

COUNTY OF HAWAI'I
DEPARTMENT OF PARKS & RECREATION
101 PAUAHI STREET, SUITE 6 | HILO, HAWAII 96720 | PHONE: 808.961.8311 | FAX: 808.961.8411

EDITH KANAKA'OLE MULTI-PURPOSE STADIUM BUILDING ADDITION & IMPROVEMENTS

HILO, HAWAII

TMK: (3) 2-2-33: 001

JOB NO.: PR-4166

PLAN SHEET DESCRIPTION: STRUCTURAL DETAILS

DESIGNED BY: MAF
DRAWN BY: MAF
CHECKED BY: YWF

SHEET NO. S1.4

___ OF ___ SHEETS

DATE: OCTOBER, 2012

S:\FLA\PRODUCTION\Projects\12010.00 COH - Ho'olulu, Edith Kanaka'ole Multi-Purpose Stadium Bldg Addition & Improvements\3.00 Design\3.01 Basis Design\3.01.2 Design Development Phase

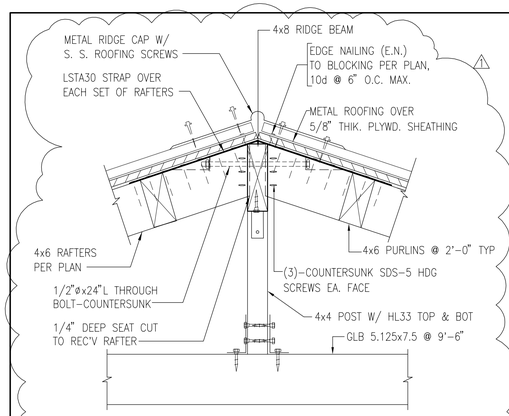

7 – TYP. RIDGE BEAM CONN. DETAIL
NOT TO SCALE

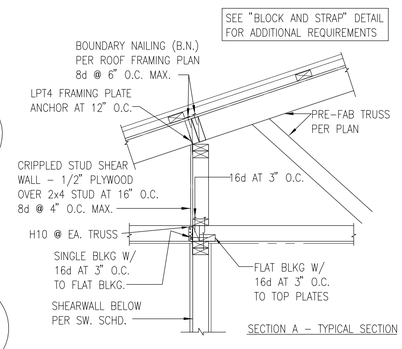

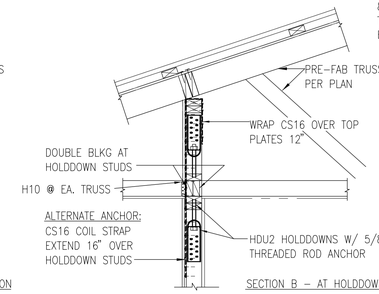

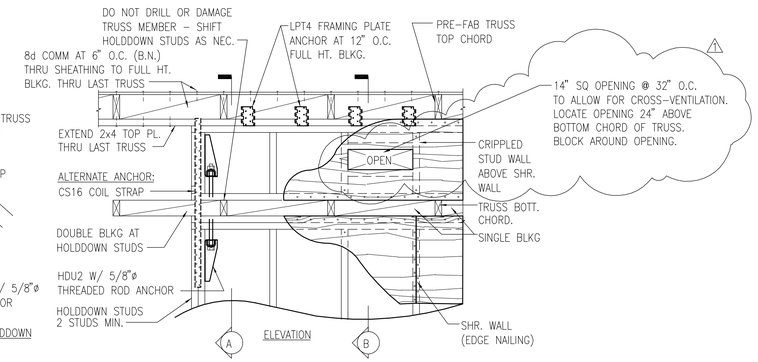

1 – INT. SHEARWALL PERP. TO TRUSS FRAMING DETAILS
NOT TO SCALE

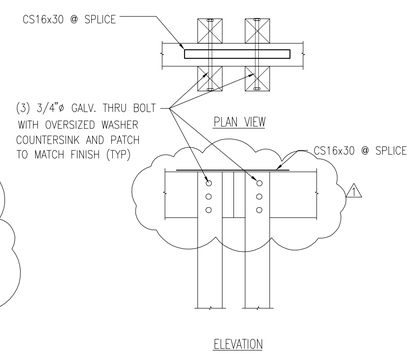

5 – TYP. PIPE SLEEVE FOOTING
NOT TO SCALE

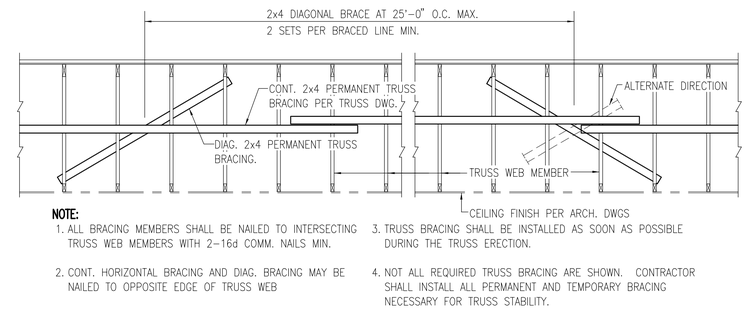

NOTE:

1. ALL BRACING MEMBERS SHALL BE NAILED TO INTERSECTING TRUSS WEB MEMBERS WITH 2-16d COMM. NAILS MIN.
2. CONT. HORIZONTAL BRACING AND DIAG. BRACING MAY BE NAILED TO OPPOSITE EDGE OF TRUSS WEB
3. TRUSS BRACING SHALL BE INSTALLED AS SOON AS POSSIBLE DURING THE TRUSS ERECTION.
4. NOT ALL REQUIRED TRUSS BRACING ARE SHOWN. CONTRACTOR SHALL INSTALL ALL PERMANENT AND TEMPORARY BRACING NECESSARY FOR TRUSS STABILITY.

2 – TRUSS BRACING DETAIL
NOT TO SCALE

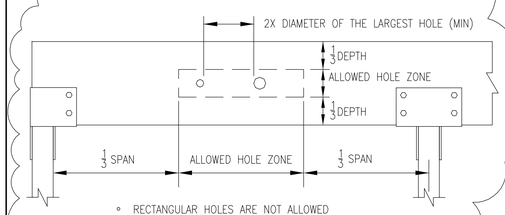

- RECTANGULAR HOLES ARE NOT ALLOWED
- NO HOLE ALLOWED IN CANTILEVERS
- VERTICAL HOLES ARE NOT ALLOWED

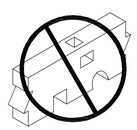

CUT ONLY ROUND HOLES AND
ONLY IN THE CENTER OF THE BEAM

ROUND HOLE CHART

BEAM DEPTH	MAXIMUM ROUND HOLE SIZE
4 3/8"	1"
5 1/2"	1 3/4"
7 1/4" to 20"	2"

SEE ILLUSTRATION FOR ALLOWED HOLE ZONE

8 – ALLOWABLE HOLES - BEAMS AND HEADERS
NOT TO SCALE

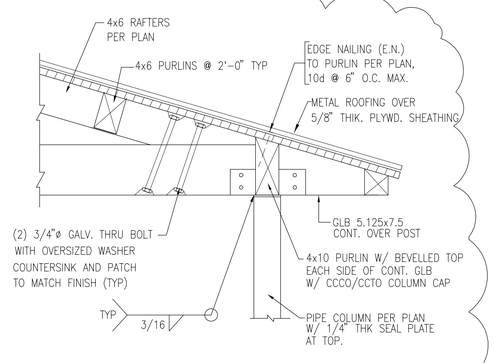

6 – TYP RAFTER CONNECTION DTL
NOT TO SCALE

1. PRE-ENG. TRUSSES PER ROOF FRAMING PLAN
2. GABLE END STUD WALL
3. TRUSS BOTTOM CHORD
4. CEILING FINISH PER ARCH. DWG.
5. GABLE END WALL TRUSS
6. FACSIA BOARD PER PLAN
7. CS18x36" AT 48" O.C.
8. TRUSS TOP CHORD
9. 2x6 OUTRIGGER @ 24" O.C.
10. H2.5 @ EA. OUTRIGGER

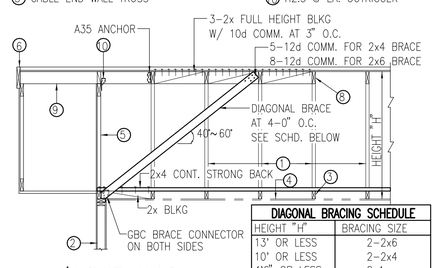

W/ OUTRIGGER LOOKOUT

DIAGONAL BRACING SCHEDULE	
HEIGHT "H"	BRACING SIZE
13' OR LESS	2-2x6
10' OR LESS	2-2x4
4'6" OR LESS	2x4

4 – GABLE END WALL BRACING
NOT TO SCALE

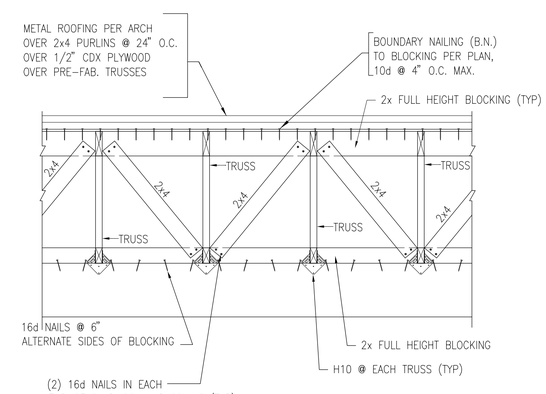

3 – TRUSS BLOCKING DETAIL
NOT TO SCALE

FLEMING & Associates, LLC
557 MANONO STREET
HILO, HAWAII

LICENSED PROFESSIONAL ENGINEER
EXP. 4/30/14
No. 9381-S
HAWAII, U.S.A.

THIS WORK WAS PREPARED BY ME OR UNDER MY SUPERVISION AND WILL BE UNDER MY OBSERVATION.

SIGNATURE

MARK	DATE	DESCRIPTION
1	11/16/12	ADDENDUM #1

REVIEWED:
DEPARTMENT OF PARKS AND RECREATION — DATE

COUNTY OF HAWAII
DEPARTMENT OF PARKS & RECREATION
101 PAUAHI STREET, SUITE 6 | HILO, HAWAII 96720 | PHONE: 808.961.8311 | FAX: 808.961.8411

EDITH KANAKA'OLE MULTI-PURPOSE STADIUM
BUILDING ADDITION & IMPROVEMENTS

JOB NO.: PR-4166 — HILO, HAWAII — TMK: (3) 2-2-33: 001

PLAN SHEET DESCRIPTION: STRUCTURAL DETAILS

DATE: OCTOBER, 2012

DESIGNED BY: MAF
DRAWN BY: MAF
CHECKED BY: YWF

SHEET NO. S1.6
___ OF ___ SHEETS

S:\FLA\PRODUCTION\Projects\12010.00 COH - Ho'oluiu, Edith Kanaka'ole Multi-Purpose Stadium Bldg Addition & Improvements\3.00 Design\3.01 Basis Design\3.01.2 Design Development Phase

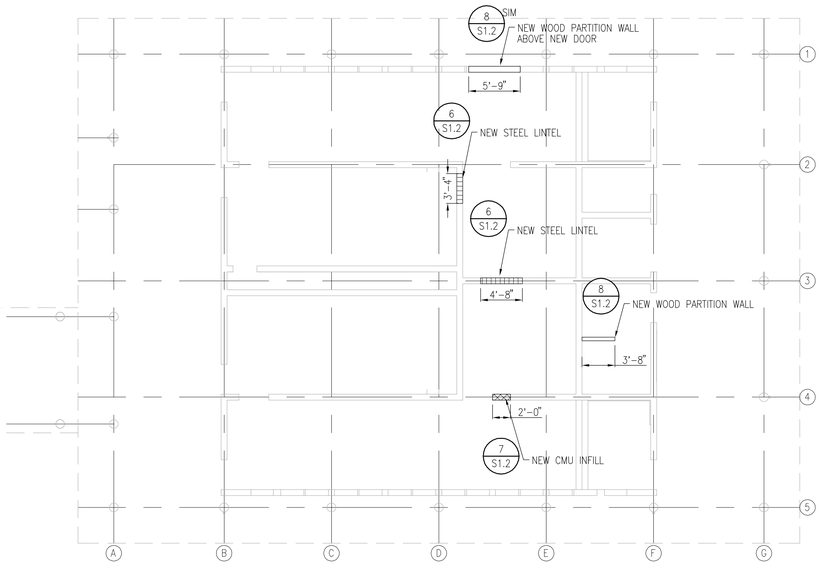

A PLAN – RESTROOM BUILDING
SCALE: 1/8" = 1'-0"

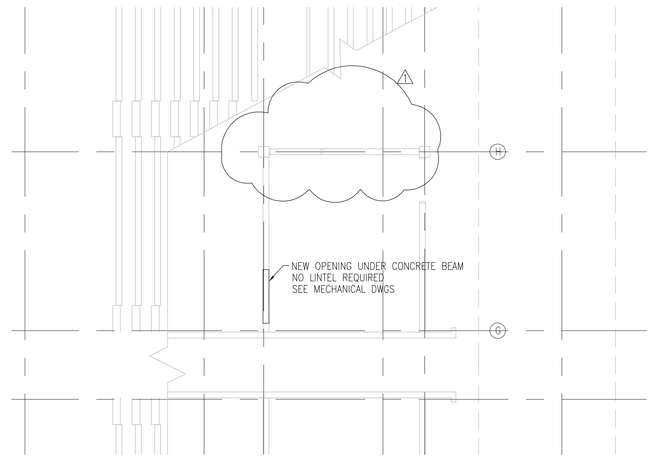

B PARTIAL PLAN – STADIUM
SCALE: 1/8" = 1'-0"

FLEMING & Associates, LLC
557 MANONO STREET
HILO, HAWAII

EVEN WEN FANG
LICENSED PROFESSIONAL ENGINEER
EXP: 4/30/14
No. 9361-S
HAWAII, U.S.A.

THIS WORK WAS PREPARED BY ME OR UNDER MY SUPERVISION AND CONSTRUCTION OF THIS PROJECT WILL BE UNDER MY OBSERVATION.

SIGNATURE

MARK	DATE	DESCRIPTION
1	11/16/12	ADDENDUM #1

REVIEWED:

DEPARTMENT OF PARKS AND RECREATION — DATE

COUNTY OF HAWAII
DEPARTMENT OF PARKS & RECREATION
101 PAUAHI STREET, SUITE 6 | HILO, HAWAII 96720 | PHONE: 808.961.8311 | FAX: 808.961.8411

EDITH KANAKA'OLE MULTI-PURPOSE STADIUM BUILDING ADDITION & IMPROVEMENTS

HILO, HAWAII

TMK: (3) 2-2-33: 001

JOB NO.: PR-4166

PLAN SHEET DESCRIPTION: RESTROOM BUILDING - PLAN

___ OF ___ SHEETS

DATE: OCTOBER, 2012

DESIGNED BY: MAF
DRAWN BY: MAF
CHECKED BY: YWF

SHEET NO.
S2.1

S:\FLA\PRODUCTION\Projects\12010.00 COH – Ho'oluliu, Edith Kanaka'ole Multi-Purpose Stadium Bldg Addition & Improvements\3.00 Design\3.01 Basis Design\3.01.2 Design Development Phase

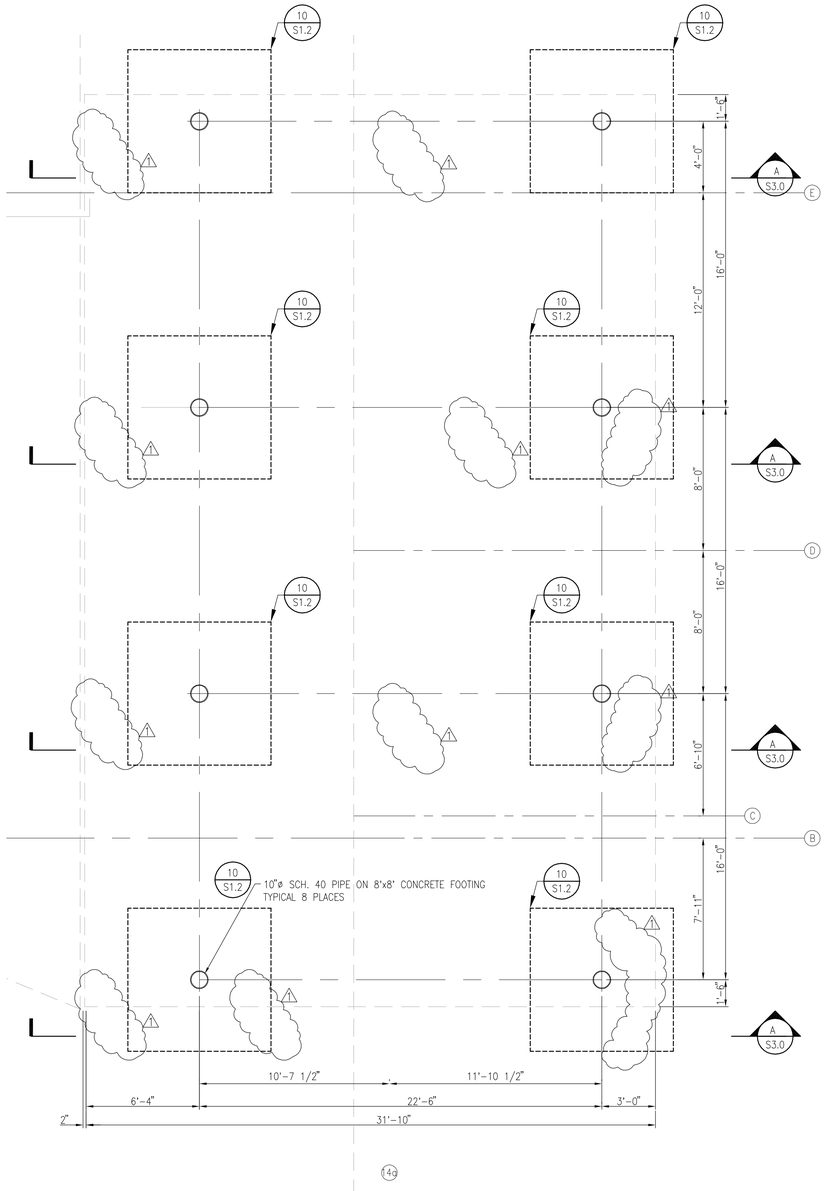

ADDITIVE ALTERNATE #2
(A) FOUNDATION PLAN – CONCESSION "A"
SCALE: 1/4" = 1'-0"

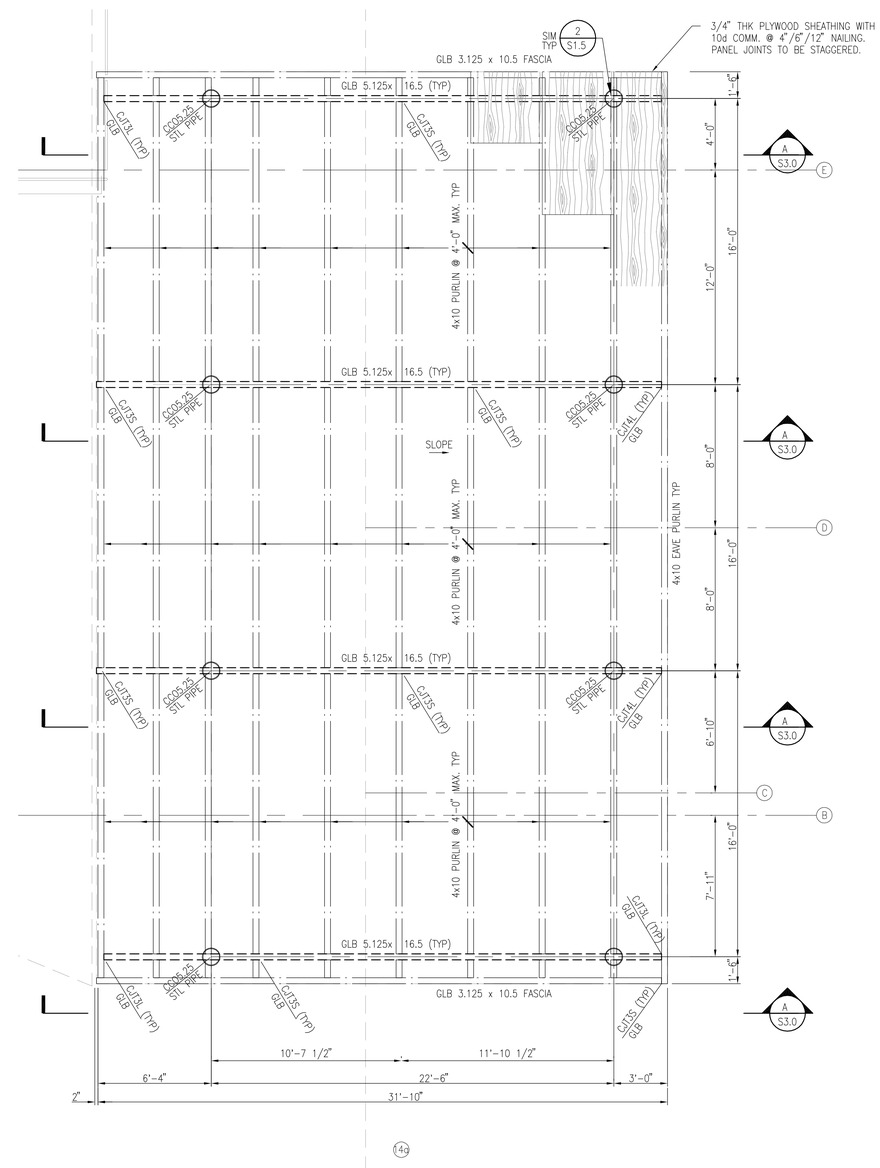

ADDITIVE ALTERNATE #2
(B) ROOF FRAMING PLAN – CONCESSION "A"
SCALE: 1/4" = 1'-0"

LEGEND

FOOTING

STEEL PIPE COLUMN

LEGEND

HEADER / BEAM

PURLINS / FASCIA

CS16 6x6 — SIMPSON HARDWARE / FRAMING MEMBER REQUIREMENT

ROOF SHEATHING NAILING:
10d COMM. @ 4" / 6" / 12"
- FIELD NAILING
- EDGE NAILING
- BOUNDARY NAILING
- NAIL SIZE

FLEMING & Associates, LLC
557 MANONO STREET
HILO, HAWAII

EDEN WEN FANG
LICENSED PROFESSIONAL ENGINEER
EXP. 4/30/14
No. 9361-S
HAWAII, U.S.A.

THIS WORK WAS PREPARED BY ME OR UNDER MY SUPERVISION AND WILL BE UNDER MY OBSERVATION.

SIGNATURE

MARK	DATE	DESCRIPTION
1	11/16/12	ADDENDUM #1

REVIEWED:

DEPARTMENT OF PARKS AND RECREATION — DATE

COUNTY OF HAWAI'I
DEPARTMENT OF PARKS & RECREATION
101 PAUAHI STREET, SUITE 6 | HILO, HAWAII 96720 | PHONE: 808.961.8311 | FAX: 808.961.8411

EDITH KANAKA'OLE MULTI-PURPOSE STADIUM BUILDING ADDITION & IMPROVEMENTS

HILO, HAWAII

TMK: (3) 2-2-33: 001

JOB NO.: PR-4166

PLAN SHEET DESCRIPTION: CONCESSION "A" - FOUNDATION AND ROOF FRAMING PLAN

DESIGNED BY: MAF
DRAWN BY: MAF
CHECKED BY: YWF

SHEET NO.
S2.2

___ OF ___ SHEETS

DATE: OCTOBER, 2012

S:\FLA\PRODUCTION\Projects\12010.00 COH – Ho'olulu, Edith Kanaka'ole Multi-Purpose Stadium Bldg Addition & Improvements\3.00 Design\3.01 Basis Design\3.01.2 Design Development Phase

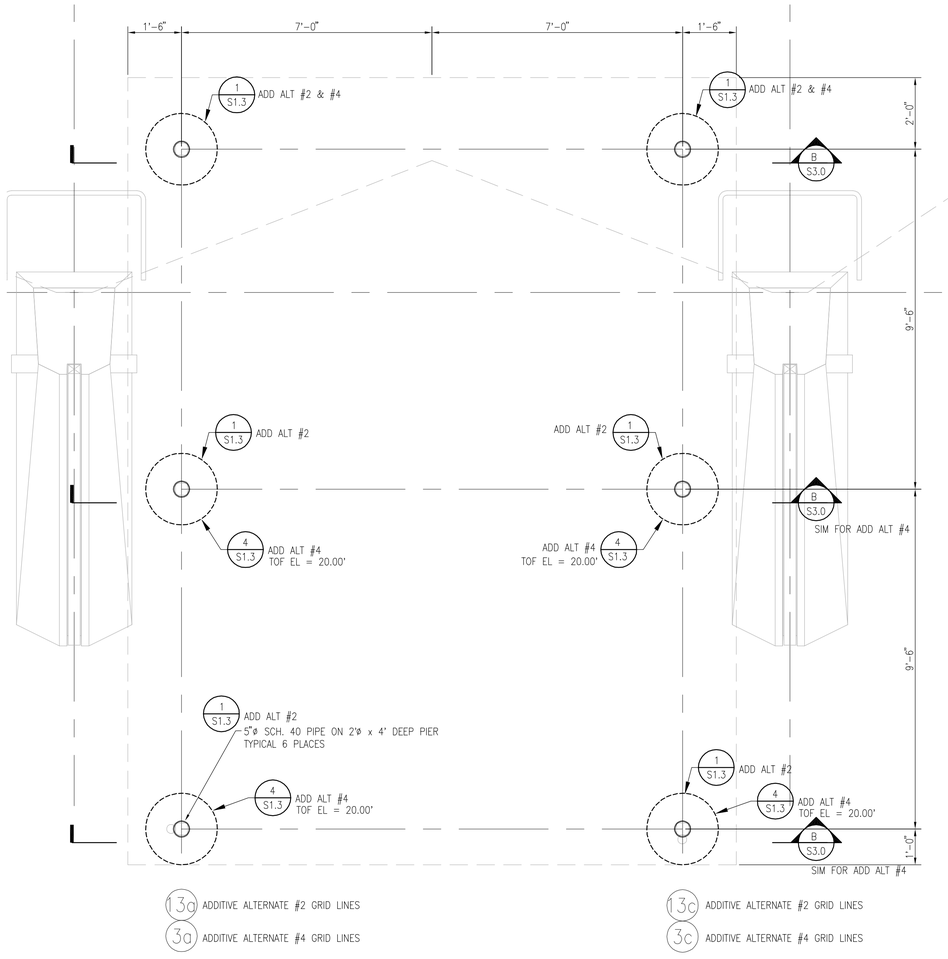

ADDITIVE ALTERNATE #2 & #4
A FOUNDATION PLAN – CONCESSION "B"
SCALE: 1/2" = 1'-0"

LEGEND

FOOTING

STEEL PIPE COLUMN

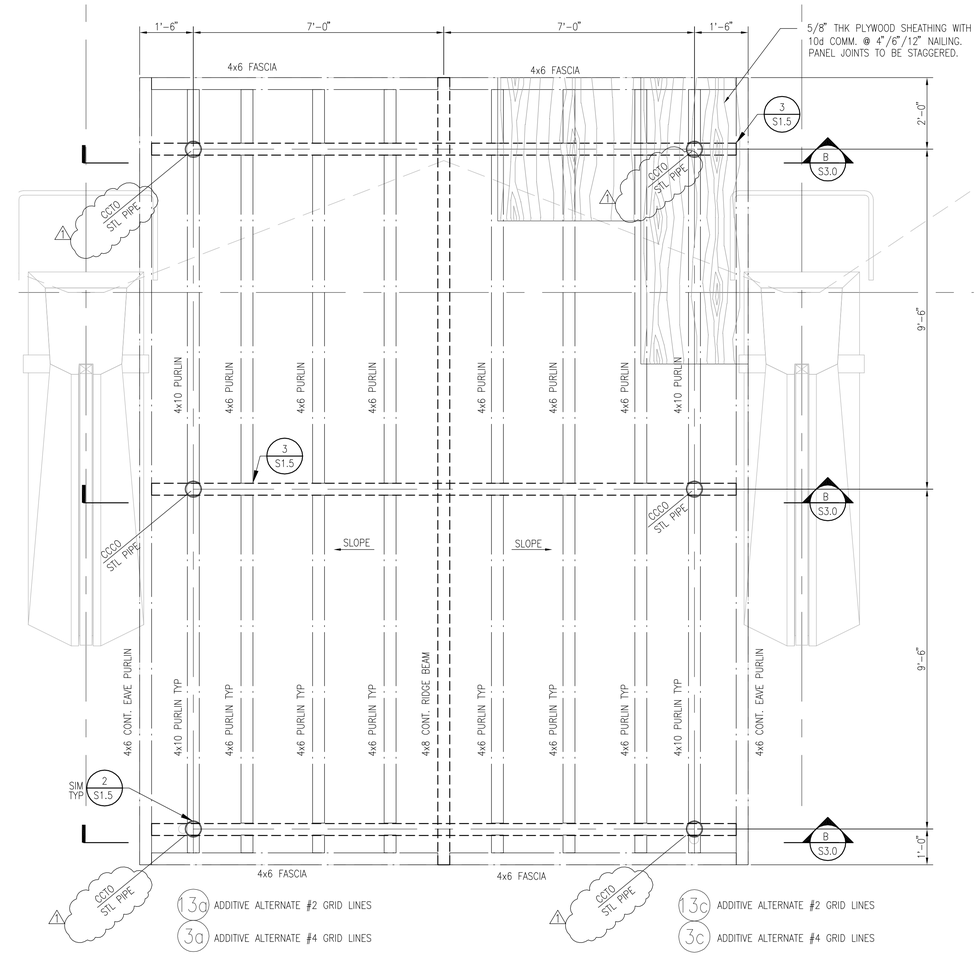

ADDITIVE ALTERNATE #2 & #4
B ROOF FRAMING PLAN – CONCESSION "B"
SCALE: 1/2" = 1'-0"

LEGEND

RAFTER / BEAM

PURLINS /FASCIA

CS16
6x6

SIMPSON HARDWARE

FRAMING MEMBER REQUIREMENT

ROOF SHEATHING NAILING:
10d COMM. @ 4" / 6" / 12"

FIELD NAILING

EDGE NAILING

BOUNDARY NAILING

NAIL SIZE

FLEMING & Associates, LLC
557 MANONO STREET
HILO, HAWAII

EDEN WEN FANG
LICENSED PROFESSIONAL ENGINEER
EXP. 4/30/14
No. 9381-S
HAWAII, U.S.A.

THIS WORK WAS PREPARED BY ME OR UNDER MY SUPERVISION AND WILL BE UNDER MY OBSERVATION.

SIGNATURE

MARK	DATE	DESCRIPTION
1	11/16/12	ADDENDUM #1

REVIEWED:

DEPARTMENT OF PARKS AND RECREATION — DATE

COUNTY OF HAWAI'I
DEPARTMENT OF PARKS & RECREATION
101 PAUAHI STREET, SUITE 6 / HILO, HAWAII 96720 / PHONE: 808.961.8311 / FAX: 808.961.8411

EDITH KANAKA'OLE MULTI-PURPOSE STADIUM BUILDING ADDITION & IMPROVEMENTS

HILO, HAWAII

TMK: (3) 2-2-33: 001

JOB NO.: PR-4166

PLAN SHEET DESCRIPTION: CONCESSION "B" - FOUNDATION AND ROOF FRAMING PLAN

DESIGNED BY: MAF

DRAWN BY: MAF

CHECKED BY: YWF

SHEET NO. S2.3

___ OF ___ SHEETS

DATE: OCTOBER, 2012

S:\FLA\PRODUCTION\Projects\12010.00 COH – Ho'olulu, Edith Kanaka'ole Multi-Purpose Stadium Bldg Addition & Improvements\3.00 Design\3.01 Basis Design\3.01.2 Design Development Phase

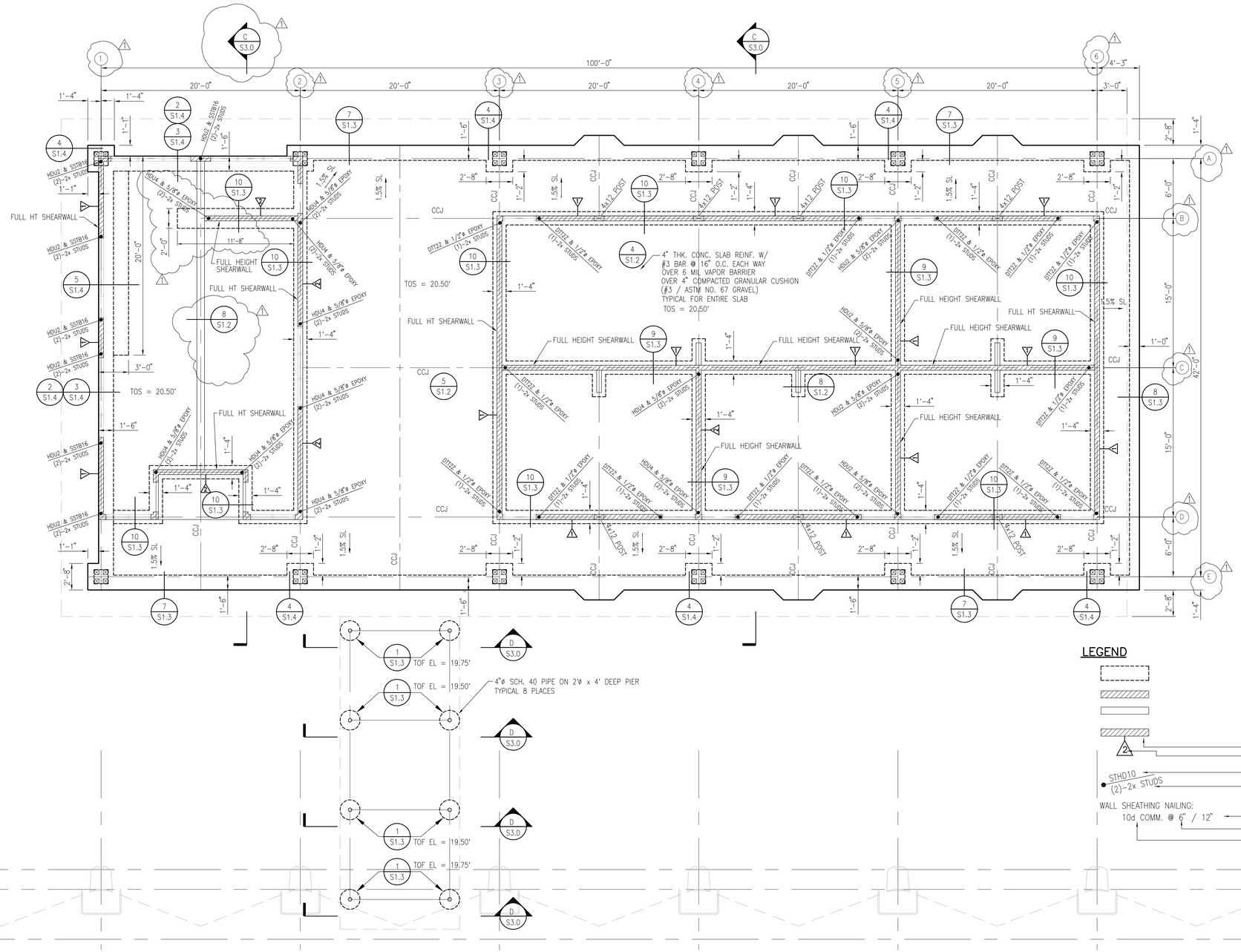

A FOUNDATION PLAN - DRESSING BUILDING

SCALE: 3/16" = 1'-0"

S:\FLA\PRODUCTION\Projects\12010.00 COH - Ho'olulu, Edith Kanaka'ole Multi-Purpose Stadium Bldg Addition & Improvements\3.00 Design\3.01 Basis Design\3.01.2 Design Development Phase

FLEMING & Associates, LLC
557 MANONO STREET
HILO, HAWAII

LICENSED PROFESSIONAL ENGINEER EXP. 4/30/14 No. 9361-S HAWAII, U.S.A.

THIS WORK WAS PREPARED BY ME OR UNDER MY SUPERVISION. CONSTRUCTION OF THIS PROJECT WILL BE UNDER MY OBSERVATION.

SIGNATURE

MARK	DATE	DESCRIPTION
1	11/16/12	ADDENDUM #1

REVIEWED:

DEPARTMENT OF PARKS AND RECREATION — DATE

COUNTY OF HAWAII
DEPARTMENT OF PARKS & RECREATION
101 PAUAHI STREET, SUITE 6 / HILO, HAWAII 96720 / PHONE: 808.961.8311 / FAX: 808.961.8411

EDITH KANAKA'OLE MULTI-PURPOSE STADIUM BUILDING ADDITION & IMPROVEMENTS

HILO, HAWAII

TMK: (3) 2-2-33: 001

JOB NO.: PR-4166

PLAN SHEET DESCRIPTION: DRESSING ROOMS - FOUNDATION PLAN

DESIGNED BY: MAF
DRAWN BY: MAF
CHECKED BY: YWF

SHEET NO. S2.4

___ OF ___ SHEETS

DATE: OCTOBER, 2012

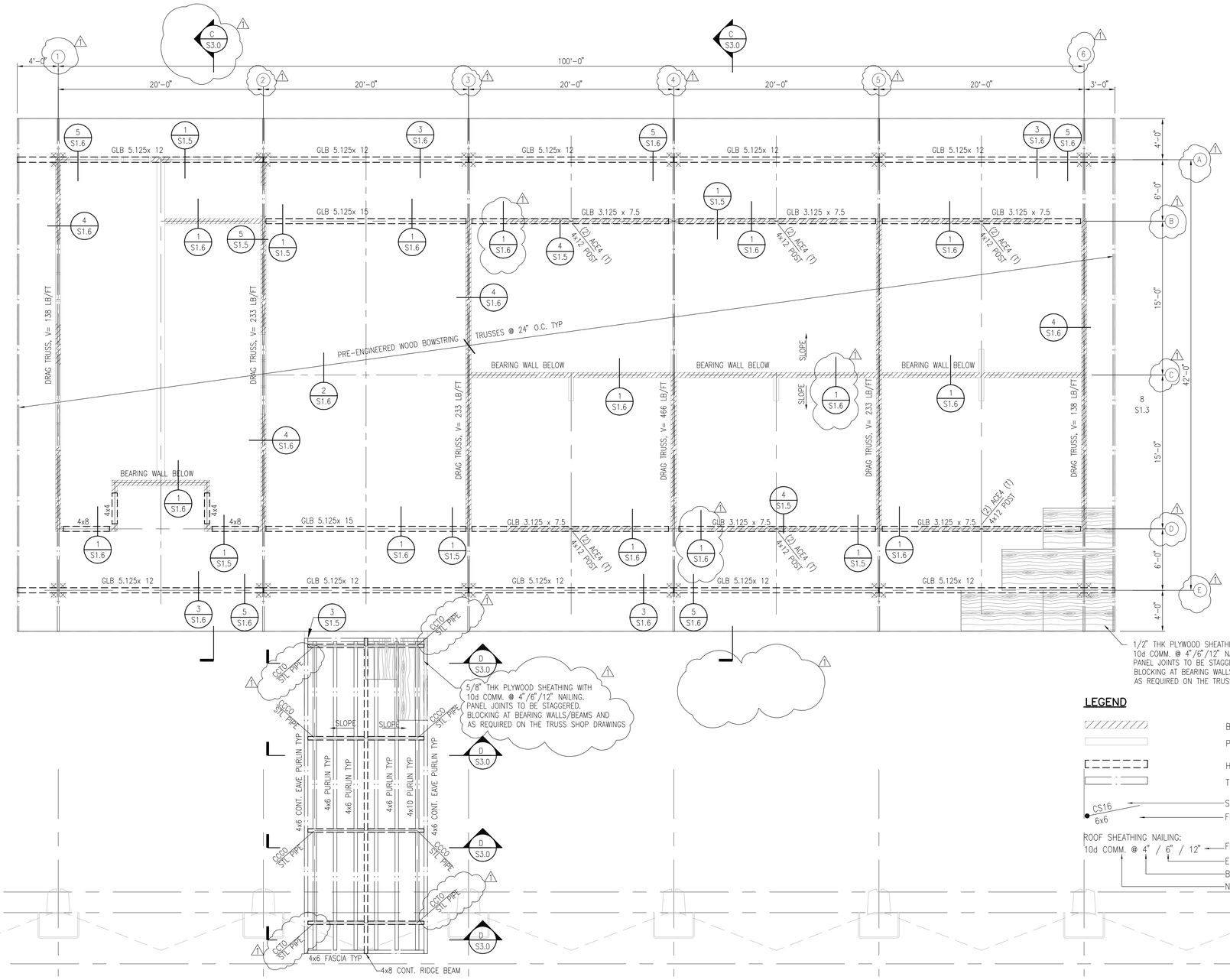

A ROOF FRAMING PLAN – DRESSING BUILDING

SCALE: 3/16" = 1'-0"

FLEMING & Associates, LLC
557 MANONO STREET
HILO, HAWAII

LICENSED PROFESSIONAL ENGINEER
EXP. 4/30/14
No. 9361-S
HAWAII, U.S.A.

THIS WORK WAS PREPARED BY ME OR UNDER MY SUPERVISION AND WILL BE UNDER MY OBSERVATION.
SIGNATURE

MARK	DATE	DESCRIPTION
1	11/16/12	ADDENDUM #1

REVIEWED:
DEPARTMENT OF PARKS AND RECREATION — DATE

COUNTY OF HAWAII
DEPARTMENT OF PARKS & RECREATION
101 PAUAHI STREET, SUITE 6 | HILO, HAWAII 96720 | PHONE: 808.961.8311 | FAX: 808.961.8411

EDITH KANAKA'OLE MULTI-PURPOSE STADIUM BUILDING ADDITION & IMPROVEMENTS

JOB NO.: PR-4166
HILO, HAWAII
TMK: (3) 2-2-33: 001

PLAN, SHEET DESCRIPTION: DRESSING ROOMS - FOUNDATION PLAN

DESIGNED BY: MAF
DRAWN BY: MAF
CHECKED BY: YWF

SHEET NO. S2.5
___ OF ___ SHEETS

DATE: OCTOBER, 2012

S:\FLA\PRODUCTION\Projects\12010.00 COH – Ho'olulu, Edith Kanaka'ole Multi-Purpose Stadium Bldg Addition & Improvements\3.00 Design\3.01 Basis Design\3.01.2 Design Development Phase

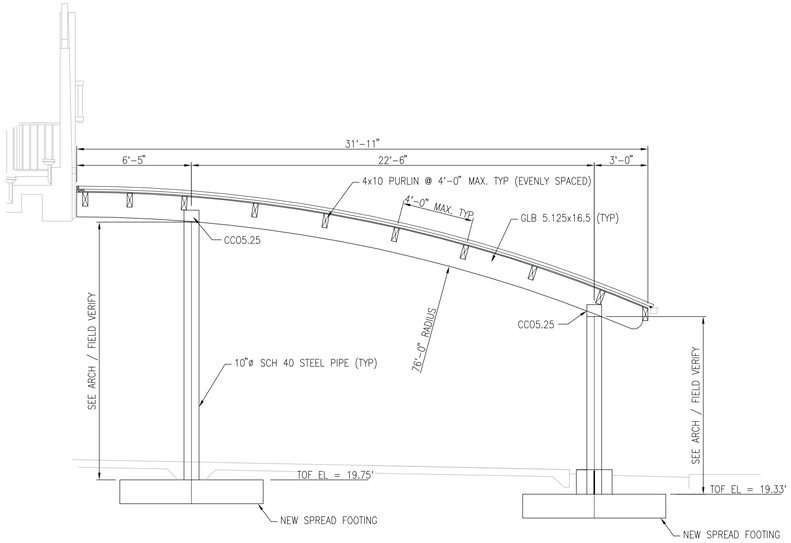

ADDITIVE ALTERNATE #2 CONCESSION "A" SECTION

A / S2.2 SCALE: 1/4" = 1'-0"

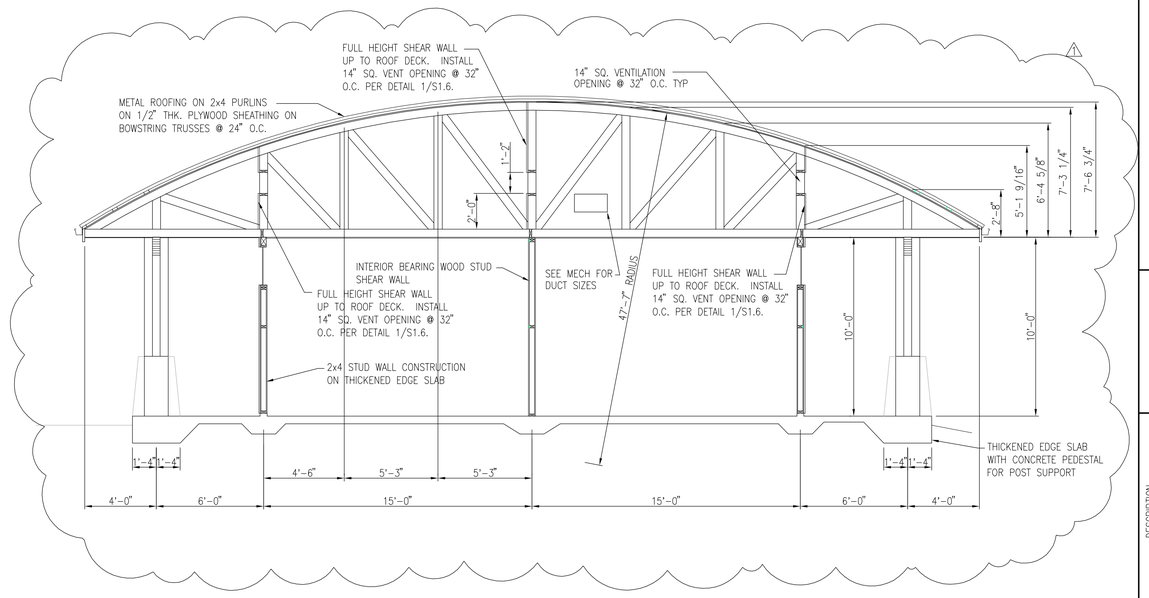

DRESSING ROOMS SECTION

C / S2.4 SCALE: 1/4" = 1'-0"

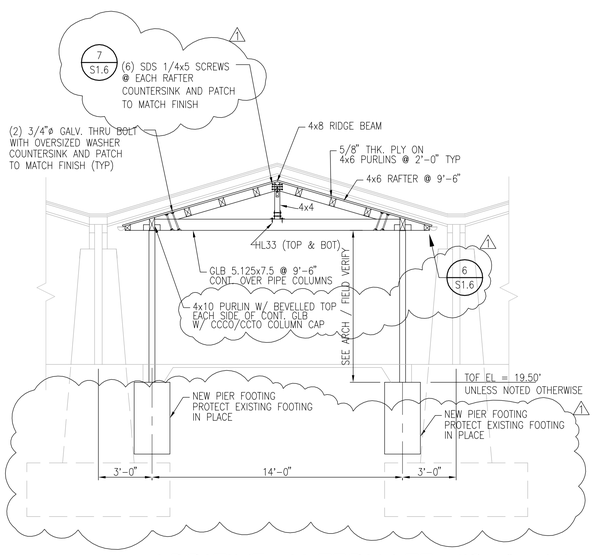

ADDITIVE ALTERNATE #2 & #4 CONCESSION "B" SECTION

B / S2.3 SCALE: 1/4" = 1'-0"

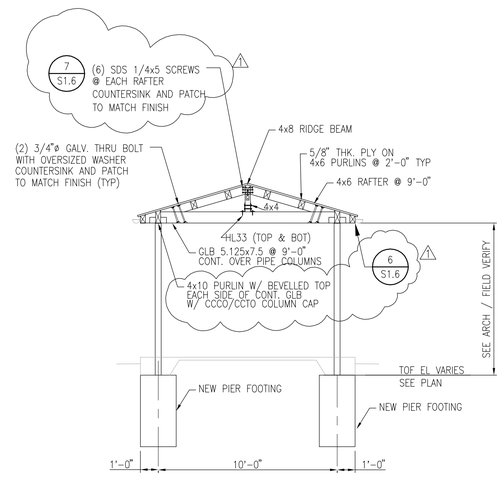

WALKWAY SECTION

D / S2.3 SCALE: 1/4" = 1'-0"

FLEMING & Associates, LLC
557 MANONO STREET
HILO, HAWAII

EVEN WEN FANG
LICENSED PROFESSIONAL ENGINEER
EXP. 4/30/14
No. 9361-S
HAWAII, U.S.A.

THIS WORK WAS PREPARED BY ME OR UNDER MY SUPERVISION AND CONSTRUCTION OF THIS PROJECT WILL BE UNDER MY OBSERVATION.

SIGNATURE

MARK	DATE	DESCRIPTION
1	11/16/12	ADDENDUM #1

REVIEWED:

DEPARTMENT OF PARKS AND RECREATION — DATE

COUNTY OF HAWAII
DEPARTMENT OF PARKS & RECREATION
101 PAUAHI STREET, SUITE 6 | HILO, HAWAII 96720 | PHONE: 808.961.8311 | FAX: 808.961.8411

EDITH KANAKA'OLE MULTI-PURPOSE STADIUM BUILDING ADDITION & IMPROVEMENTS

HILO, HAWAII — TMK: (3) 2-2-33: 001

JOB NO.: PR-4166

PLAN SHEET DESCRIPTION: BUILDING SECTIONS

DESIGNED BY: MAF
DRAWN BY: MAF
CHECKED BY: YWF

SHEET NO. S3.0

___ OF ___ SHEETS

DATE: OCTOBER, 2012

S:\FLA\PRODUCTION\Projects\12010.00 COH – Ho'oluiu, Edith Kanaka'ole Multi-Purpose Stadium Bldg Addition & Improvements\3.00 Design\3.01 Basis Design\3.01.2 Design Development Phase