GENERAL NOTES

GENERAL

1. ALL MATERIAL AND WORKMANSHIP SHALL CONFORM TO THE DRAWINGS AND THE SPECIFICATIONS, AND SHALL CONFORM TO THE INTERNATIONAL BUILDING CODE (IBC) 2006.
2. THE CONTRACTOR SHALL BE RESPONSIBLE FOR COORDINATING THE WORK OF ALL TRADES AND SHALL VERIFY ALL DIMENSIONS AND CONDITIONS PRIOR TO STARTING WORK. ALL DISCREPANCIES, OMISSIONS OR CONFLICTS SHALL BE REPORTED TO THE CONTRACTING OFFICER AND BE RESOLVED BEFORE PROCEEDING WITH THE WORK.
3. ALL INFORMATION SHOWN ON THE DRAWINGS RELATIVE TO EXISTING CONDITIONS IS GIVEN AS THE BEST PRESENT KNOWLEDGE, BUT WITHOUT GUARANTEE OF ACCURACY. WHERE ACTUAL CONDITIONS CONFLICT WITH THE DRAWINGS, THEY SHALL BE REPORTED TO THE CONTRACTING OFFICER SO THAT THE PROPER REVISIONS MAY BE MADE. MODIFICATION OF DETAILS SHALL NOT BE MADE WITHOUT WRITTEN APPROVAL OF THE CONTRACTING OFFICER.
4. IN THE EVENT OF CONFLICTS BETWEEN THE CONTRACT DOCUMENTS (INCLUDING DRAWINGS AND SPECIFICATIONS) THE MORE STRINGENT CRITERIA GOVERNS. THE CONTRACTOR SHALL IMMEDIATELY NOTIFY THE CONTRACTING OFFICER OF THESE DISCREPANCIES. IF WARRANTED, AN ADDENDUM WILL BE ISSUED FOR CLARIFICATION.
5. DRAWINGS INDICATE GENERAL AND TYPICAL DETAILS OF CONSTRUCTION. WHERE CONDITIONS ARE NOT SPECIFICALLY INDICATED BUT ARE OF SIMILAR CHARACTER TO DETAILS SHOWN, SIMILAR DETAILS OF CONSTRUCTION SHALL BE USED, SUBJECT TO THE REVIEW BY THE CONTRACTING OFFICER.
6. ALL DETAILS DESIGNATED AS TYPICAL SHALL OCCUR IN ADDITION TO ANY OTHER SPECIFIC DETAIL CALLED OUT.
7. ALL CONNECTIONS AND CONSTRUCTION CONDITIONS NOT SPECIFICALLY SHOWN SHALL BE DETAILED BY THE CONTRACTOR AND SHALL BE SUBMITTED TO THE CONTRACTING OFFICER FOR REVIEW. DETAILS SHALL COMPLY WITH THE DRAWINGS AND SPECIFICATIONS, CONFORM TO CURRENT CONSTRUCTION PRACTICES, AND MEET ALL REQUIREMENTS OF THE LATEST APPLICABLE BUILDING CODES.
8. SHOP DRAWINGS REQUIRED BY THE SPECIFICATIONS SHALL BE SUBMITTED TO THE CONTRACTING OFFICER FOR REVIEW PRIOR TO FABRICATION. THE CONTRACTOR SHALL COORDINATE ALL SUCH DRAWINGS, AND REVIEW THEM FOR ACCURACY, COMPLETENESS AND COMPLIANCE WITH THE CONTRACT REQUIREMENTS AND SHALL INDICATE HIS/HER APPROVAL THEREON AS EVIDENCE OF SUCH COORDINATION AND REVIEW. SHOP DRAWINGS SUBMITTED TO THE CONTRACTING OFFICER WITHOUT EVIDENCE OF THE CONTRACTOR'S APPROVAL MAY BE RETURNED FOR RESUBMISSION. ANY WORK DONE PRIOR TO APPROVAL SHALL BE AT THE CONTRACTOR'S RISK. APPROVAL BY THE CONTRACTING OFFICER SHALL NOT RELIEVE THE CONTRACTOR FROM RESPONSIBILITY FOR ANY ERRORS OR OMISSIONS IN SUCH DRAWINGS, NOR FROM RESPONSIBILITY FOR COMPLYING WITH THE REQUIREMENTS OF THIS CONTRACT. IF THE SHOP DRAWINGS DEVIATES FROM THE CONTRACT REQUIREMENTS, THE CONTRACTOR SHALL DESCRIBE SUCH VARIATIONS IN WRITING, SEPARATE FROM THE DRAWINGS, AT THE TIME OF SUBMISSION. THE PROPOSED VARIATIONS SHALL BE CIRCLED IN "RED" TO ALERT THE CONTRACTING OFFICER OF THE PROPOSED VARIATIONS ON THE SHOP DRAWINGS. FAILURE TO COMPLY WILL BE BASIS FOR REJECTION.
9. DURING CONSTRUCTION, THE CONTRACTOR SHALL BE RESPONSIBLE FOR THE SAFETY OF THE JOBSITE. THE CONTRACTOR SHALL PROVIDE ADEQUATE SHORING, BRACING, GUYS, ETC., IN ACCORDANCE WITH ALL SAFETY ORDINANCES.
10. THE CONTRACTOR SHALL BE SOLELY RESPONSIBLE FOR ALL EXCAVATION PROCEDURES, INCLUDING LAGGING, SHORING AND PROTECTION OF ADJACENT PROPERTY, STRUCTURES, STREETS, AND UTILITIES.

DESIGN LOADS

1. LATERAL LOADS
   - A. EARTHQUAKE . . . .SOIL PROFILE – B, I = 1.50, SEISMIC DESIGN CATEGORY D
   - B. WIND . . . . . .115 MPH, EXPOSURE C, I=1.15, ENCLOSED

   3/S1
2. LIVE LOADS
   - A. ROOF . . . . . 20 PSF
   - B. CATWALK . . . . . 40 PSF
3. LATERAL EARTH PRESSURES
   - A. RESTRAINED WALLS . . . . . 55 PCF
   - B. UNRESTRAINED WALLS (LEVEL BACKFILL). . . . . 40 PCF
   - B. UNRESTRAINED WALLS (SLOPING BACKFILL). . . . 50 PCF
   - D. PASSIVE PRESSURE . . . . . .200 PCF
   - E. COEFFICIENT OF FRICTION 0.45

EARTHWORK AND FOUNDATION

3/S2

1. THE FOUNDATION DESIGN IS BASED ON THE RECOMMENDATIONS IN REPORT W.O. 12–5268, TITLED "FOUNDATION INVESTIGATION; KA'U GYMNASIUM; KA'U, HAWAII; TMK: 9–6–05;08 AND 39" BY HIRATA AND ASSOCIATES, INC., DATED APRIL 9, 2012. FOUNDATION WORK SHALL BE PERFORMED IN ACCORDANCE WITH IS REPORT AND SUBSEQUENT ADDENDUMS. THIS REPORT SHALL BE CONSIDERED PART OF THE CONTRACT DOCUMENTS. A COPY OF THE REPORT IS ON FILE AT THE CONTRACTING OFFICER'S OFFICE FOR REVIEW BY THE CONTRACTOR.
2. THE FOUNDATION DESIGN IS BASED ON A BEARING CAPACITY OF 6,000 PSF FOR TYPICAL FOUNDATIONS BEARING ON BASALT.
3. ALL FOOTINGS SHALL BE FOUNDED AT LEAST 24 INCHES BELOW THE LOWEST ADJACENT GRADE OR FINISH FLOOR, WHICHEVER IS LOWER.
4. ALL FOOTING EXCAVATIONS, FILL AND BACKFILL OPERATIONS SHALL BE MONITORED AND APPROVED BY THE ABOVE NAMED SOIL ENGINEER OR HIS REPRESENTATIVE PRIOR TO THE PLACEMENT OF ANY REINFORCING STEEL OR CONCRETE. CONTRACTOR SHALL MAKE APPROPRIATE ARRANGEMENTS FOR OBSERVATIONS AS REQUIRED.
5. CLEAN AND MOISTEN FOOTING TRENCHES PRIOR TO POURING CONCRETE. WHERE SHRINKAGE CRACKS ARE NOTED AFTER COMPACTION OF THE FOOTING SUBGRADE, THE SOIL SHALL BE MOISTENED TO CLOSE ALL CRACKS.
6. DO NOT PLACE CONDUITS AND UTILITY LINES IN FOOTING TRENCHES.

REINFORCING STEEL

1. ALL REINFORCING BARS SHALL CONFORM TO ASTM A615, GRADE 60, UNLESS NOTED OTHERWISE. TIES AND STIRRUPS SHALL BE GRADE 60.
2. WELDED WIRE FABRIC SHALL CONFORM TO ASTM A82 AND A185.
3. MINIMUM CONCRETE CLEAR COVER:
   - A. CONCRETE CAST AGAINST EARTH. . . . . 3"
   - B. CONCRETE EXPOSED TO EARTH OR WEATHER
     - 1. #5 BAR AND SMALLER . . . . . 1 1/2"
     - 2. #6 BAR AND LARGER . . . . . 2"
   - C. CONCRETE NOT EXPOSED TO EARTH OR WEATHER
     - 1. SLABS, WALLS . . . . . 3/4"
     - 2. BEAMS, COLUMNS (TO TIES, STIRRUPS, SPIRALS) . . 1 1/2"
4. ANCHOR BOLTS, DOWELS AND OTHER EMBEDDED ITEMS SHALL BE SECURELY TIED IN PLACE BEFORE CONCRETE IS POURED. DOWELS SHALL MATCH THE SIZE AND SPACING OF THE COLUMN AND WALL BARS UNLESS NOTED OTHERWISE.
5. SPLICES:
   - A. ALL REINFORCING SHALL BE LAPPED 48 BAR DIAMETERS OR 24 INCHES MINIMUM UNLESS NOTED OTHERWISE.
   - B. ALL REINFORCING SHALL BE LAPPED AS INDICATED. WHERE LAP OR SPLICE LOCATIONS ARE NOT SPECIFICALLY INDICATED, LAPS OR SPLICES SHALL BE WELL STAGGERED AND BE APPROVED BY THE CONTRACTING OFFICER.
6. WELDING TO REINFORCING BARS SHALL BE PROHIBITED EXCEPT BY SPECIFIC AUTHORIZATION OF THE CONTRACTING OFFICER.

CONCRETE

1. ALL CONCRETE WORK SHALL CONFORM TO ACI 318.
2. AGGREGATES SHALL CONFORM TO ASTM C33.
3. CEMENT SHALL CONFORM TO ASTM C150, TYPE I OR II.
4. ALL CONCRETE UNLESS OTHERWISE NOTED SHALL BE REGULAR WEIGHT (150 PCF), HARD ROCK TYPE.
5. ULTIMATE COMPRESSIVE STRENGTH SHALL BE AS FOLLOWS:

ITEM	STRENGTH (PSI)	MAX W/C RATIO
FOOTINGS	3000	0.60
SLAB–ON–GRADE / THICKENED SLABS	4000	0.50
COLUMNS AND WALLS	4000	0.50
SUSPENDED SLAB AND BEAMS	4000	0.50

6. PLACEMENT OF CONCRETE SHALL BE IN CONFORMANCE WITH ACI 301.
7. CONCRETE SHALL BE MAINTAINED IN A MOIST CONDITION FOR A MINIMUM OF FIVE (5) DAYS AFTER PLACEMENT. ALTERNATE METHODS WILL BE APPROVED IF SATISFACTORY PERFORMANCE CAN BE ASSURED.
8. SUBMIT LOCATION OF JOINTS PRIOR TO PLACEMENT. JOINTS SHALL BE LOCATED TO MINIMIZE THE EFFECTS OF SHRINKAGE AND PLACED AT POINTS OF LOW STRESS.
   - A. ALL SLABS–ON–GRADE SHALL BE POURED WITH CRACK CONTROL JOINTS NOT MORE THAN 15'–0" APART OR AS INDICATED ON THE DRAWINGS.
   - B. LOCATION OF ALL POUR JOINTS IN SUSPENDED FLOORS SHALL BE SUBMITTED AND APPROVED BY THE CONTRACTING OFFICER. ALL COLD JOINTS SHALL BE KEYED. IN GENERAL, JOINTS SHALL BE AT MIDSPAN FOR HORIZONTAL ELEMENTS AND AT BEAM OR SLAB SOFFITS FOR VERTICAL ELEMENTS.
9. ALL CONSTRUCTION JOINTS SHALL BE THOROUGHLY CLEANED, ALL LAITANCE REMOVED, THOROUGHLY WETTED, AND SLUSHED WITH A COAT OF NEAT CEMENT IMMEDIATELY BEFORE PLACING NEW CONCRETE.
10. PIPES SHALL NOT BE EMBEDDED IN STRUCTURAL CONCRETE UNLESS SPECIFICALLY APPROVED. PIPES SHALL NOT PASS THROUGH STRUCTURAL CONCRETE IN SLEEVES, UNLESS SPECIFICALLY APPROVED BY THE CONTRACTING OFFICER.
11. THE CONTRACTOR SHALL NOTIFY THE CONTRACTING OFFICER 48 HOURS PRIOR TO THE POURING OF ANY STRUCTURAL CONCRETE. NO POUR SHALL PROCEED WITHOUT THE CONSENT OF THE CONTRACTING OFFICER.
12. EPOXY SHALL BE UNITEX PRO–POXY 300 OR APPROVED EQUAL. EPOXY SHALL BE MIXED, APPLIED, AND CURED IN STRICT ACCORDANCE WITH THE MANUFACTURER'S PRINTED INSTRUCTIONS.

CONCRETE MASONRY

1. CONCRETE MASONRY UNITS SHALL CONFORM TO ASTM C90.
2. MORTAR SHALL CONFORM TO ASTM C270, TYPE M OR S, WITH A MINIMUM 28–DAY COMPRESSIVE STRENGTH OF 2,000 PSI.
3. GROUT SHALL CONFORM TO ASTM C476, WITH A MINIMUM 28–DAY COMPRESSIVE STRENGTH OF 2,500 PSI.
4. REINFORCING STEEL IN MASONRY SHALL BE LAPPED 48 DIAMETERS MINIMUM.
5. HORIZONTAL JOINT REINFORCING SHALL CONFORM TO ASTM A82. PROVIDE REINFORCING AT 16" O.C., LAP 8" MINIMUM AT ALL SPLICES, INTERSECTIONS, AND CORNERS. 3/S3
6. ALL WALLS SHALL BE CONSTRUCTED IN CONVENTIONAL RUNNING BOND UNLESS NOTED OTHERWISE.
7. ALL CELLS SHALL BE GROUTED SOLID, UNLESS NOTED OTHERWISE. GROUT MASONRY IN 5'–4" MAXIMUM LIFTS. REINFORCING SHALL BE SECURED AGAINST DISPLACEMENT PRIOR TO GROUTING BY WIRE POSITIONERS AT INTERVALS NOT EXCEEDING 200 BAR DIAMETERS NOR 10 FEET.
8. THE MINIMUM SPACING BETWEEN MASONRY UNITS AND REINFORCING STEEL SHALL BE 1/2", AND BETWEEN PARALLEL REINFORCING BARS, 3/4".
9. IF WORK IS STOPPED ONE (1) HOUR OR LONGER, PROVIDE HORIZONTAL CONSTRUCTION JOINTS BY STOPPING THE GROUT 1 1/2" BELOW THE TOP OF THE BLOCK.
10. SPECIAL INSPECTION OF CONCRETE MASONRY WORK IS REQUIRED. 3/S3

STRUCTURAL STEEL

1. ALL STRUCTURAL AND MISCELLANEOUS STEEL SHALL BE FABRICATED AND ERECTED IN ACCORDANCE WITH AISC SPECIFICATIONS FOR THE DESIGN, FABRICATION AND ERECTION OF STRUCTURAL STEEL FOR BUILDINGS, LATEST EDITION.
2. ALL STRUCTURAL STEEL SHAPES AND PLATES SHALL CONFORM TO ASTM A36. W–SHAPES MAY CONFORM TO ASTM A992.
3. ALL WELDS SHALL CONFORM TO THE "STANDARD CODE FOR ARC AND GAS WELDING", OF THE AMERICAN WELDING SOCIETY AND BE DONE BY CERTIFIED WELDERS. UNLESS A LARGER SIZE OF FILLET WELD IS SPECIFIED ON THE PLANS, PROVIDE THE MINIMUM SIZE OF WELD PER AISC CHAPTER J, SECTION J2 AND TABLE J2.4.
4. BOLTS SHALL BE HIGH STRENGTH BOLTS CONFORMING TO ASTM A325. WHERE SPECIFICALLY NOTED, MACHINE BOLTS CONFORMING TO ASTM A307 MAY BE USED.
5. PIPE COLUMNS SHALL CONFORM TO ASTM A53, GRADE B, UNLESS NOTED OTHERWISE.
6. STEEL TUBES SHALL CONFORM TO ASTM A500, GRADE B.
7. CONTRACTOR SHALL RETAIN HIS OWN STRUCTURAL ENGINEER TO DESIGN ALL STRUCTURAL STEEL CONNECTIONS AND CONDITIONS NOT SPECIFICALLY SHOWN ON THE CONTRACT DRAWINGS. ALL COSTS ASSOCIATED WITH THIS WORK SHALL BE INCLUDED IN THE BASE BID. CALCULATIONS SHALL BE PREPARED AND STAMPED BY A STRUCTURAL ENGINEER LICENSED IN THE THE STATE OF HAWAII AND SUBMITTED FOR REVIEW.
8. CONTRACTOR SHALL SUBMIT SHOP DRAWINGS FOR REVIEW PRIOR TO FABRICATION. THE CONTRACTOR SHALL RETAIN HIS OWN STRUCTURAL ENGINEER TO REVIEW AND CERTIFY THAT THE STRUCTURAL STEEL SHOP DRAWINGS ARE CORRECT, COMPLETE, AND IN COMPLIANCE WITH THE CONTRACT DRAWINGS AND SPECIFICATIONS. THE STRUCTURAL ENGINEER PERFORMING THE REVIEW SHALL BE LICENSED IN THE STATE OF HAWAII WITH A MINIMUM OF TWELVE (12) YEARS OF EXPERIENCE IN STRUCTURAL STEEL DESIGN.

METAL DECKING

1. ALL METAL DECK SHALL COMPLY WITH AISI "NORTH AMERICAN SPECIFICATION FOR THE DESIGN OF COLD–FORMED STEEL STRUCTURAL MEMBERS," LATEST EDITION. 3/S4
2. ROOF DECK:
   - A. ROOF DECK AND ACCESSORIES SHALL BE FORMED FROM STEEL SHEETS CONFORMING TO ASTM A653 – SS GRADE 33.
   - B. THE DECK SHALL BE GALVANIZED IN ACCORDANCE WITH ASTM A653, CLASS G–60, LIGHT COMMERCIAL.
   - C. SEE PLANS FOR TYPE, GAGE, AND SECTION PROPERTIES.
   - D. ROOF UNITS SHALL BE FASTENED TO THE STEEL FRAMEWORK AT ALL SUPPORTS BY 3/4" DIAMETER PUDDLE WELDS SPACED NOT MORE THAN 6" O.C. WHERE TWO UNITS LAP, THEY SHALL BE SEAM WELDED AT 2–0" O.C. MAXIMUM (MINIMUM TWO WELDS PER SPAN).
3. ALL METAL DECK GAGES SHOWN ON THE ROOF PLANS ASSUME A CONTINUOUS DECK SPANNING OVER A MINIMUM OF THREE SUPPORTS. THE CONTRACTOR SHALL PROVIDE HEAVIER GAGES WHERE THE SUPPORT CONDITION IS NOT ATTAINED.

SPECIAL INSPECTIONS

1. SPECIAL INSPECTIONS SHALL BE PROVIDED DURING CONSTRUCTION IN ACCORDANCE WITH SECTION 1704 OF THE INTERNATIONAL BUILDING CODE, INCLUDING BUT NOT LIMITED TO THE FOLLOWING TYPES OF WORK:
   - A. CONCRETE
   - B. CONCRETE AND MASONRY REINFORCING
   - C. BOLTS AND EPOXY ANCHORS INSTALLED IN CONCRETE AND MASONRY
   - D. HIGH STRENGTH BOLTS
   - E. STRUCTURAL WELDING
   - F. CONCRETE MASONRY
2. COST OF SPECIAL INSPECTIONS SHALL BE BORNE BY THE CONTRACTOR.
3. THE CONTRACTOR SHALL NOTIFY THE CONTRACTING OFFICER AND THE SPECIAL INSPECTOR 48 HOURS PRIOR TO THE PLACEMENT OF ALL WORK REQUIRING SPECIAL INSPECTION AS DESCRIBED ABOVE. CONTRACTOR SHALL MAKE APPROPRIATE ARRANGEMENTS FOR INSPECTIONS AS REQUIRED.
4. NO WORK REQUIRING SPECIAL INSPECTION SHALL PROCEED WITHOUT THE APPROVAL OF THE CONTRACTING OFFICER AND THE SPECIAL INSPECTOR. ALL DISCREPANCIES NOTED BY THE CONTRACTING OFFICER SHALL BE BROUGHT TO THE IMMEDIATE ATTENTION OF THE CONTRACTOR FOR CORRECTION, THEN, IF UNCORRECTED, TO THE PROPER DESIGN AUTHORITY AND THE BUILDING OFFICIAL.
5. SPECIAL INSPECTIONS SHALL NOT RELIEVE THE GENERAL CONTRACTOR OF HIS RESPONSIBILITIES TO PERFORM THE WORK IN ACCORDANCE WITH THE CONSTRUCTION DOCUMENTS AND TO PROVIDE JOBSITE SAFETY.

REVISION	DATE	DESCRIPTION	MADE BY	APPROVED
3	5/21/2012	ADDENDUM 3.		

STUART K. OTAKE
LICENSED PROFESSIONAL ENGINEER
No. 5114–S
HAWAII, U.S.A.
EXPIRES 4/30/14

This work was prepared by me or under my supervision and construction of this project will be under my observation.

MITSUNAGA & ASSOCIATES, INC.

COUNTY OF HAWAI'I
DEPARTMENT OF PUBLIC WORKS, BUILDING DIVISION

NEW KA'Ū DISTRICT GYMNASIUM & SHELTER AT KA'U AND PAHALA ELEMENTARY SCHOOL CAMPUS
JOB NO. B-4108

PA'AU'AU AHUPUA'A, DISTRICT, HAWAI'I
ISLAND AND COUNTY OF HAWAII
96-2150 PIKAKE STREET, PAHALA, HAWAII 96777
TMK: (3) 9-6-05: 08 & 39

GENERAL NOTES

REVIEWED:

DIVISION CHIEF
BUILDING DIVISION
DEPARTMENT OF PUBLIC WORKS

DATE
2012 APR-05

DESIGN BY:
DRAWN BY:
CHECKED BY:
SHEET NO.
S-0.1
110 OF 190 SHTS

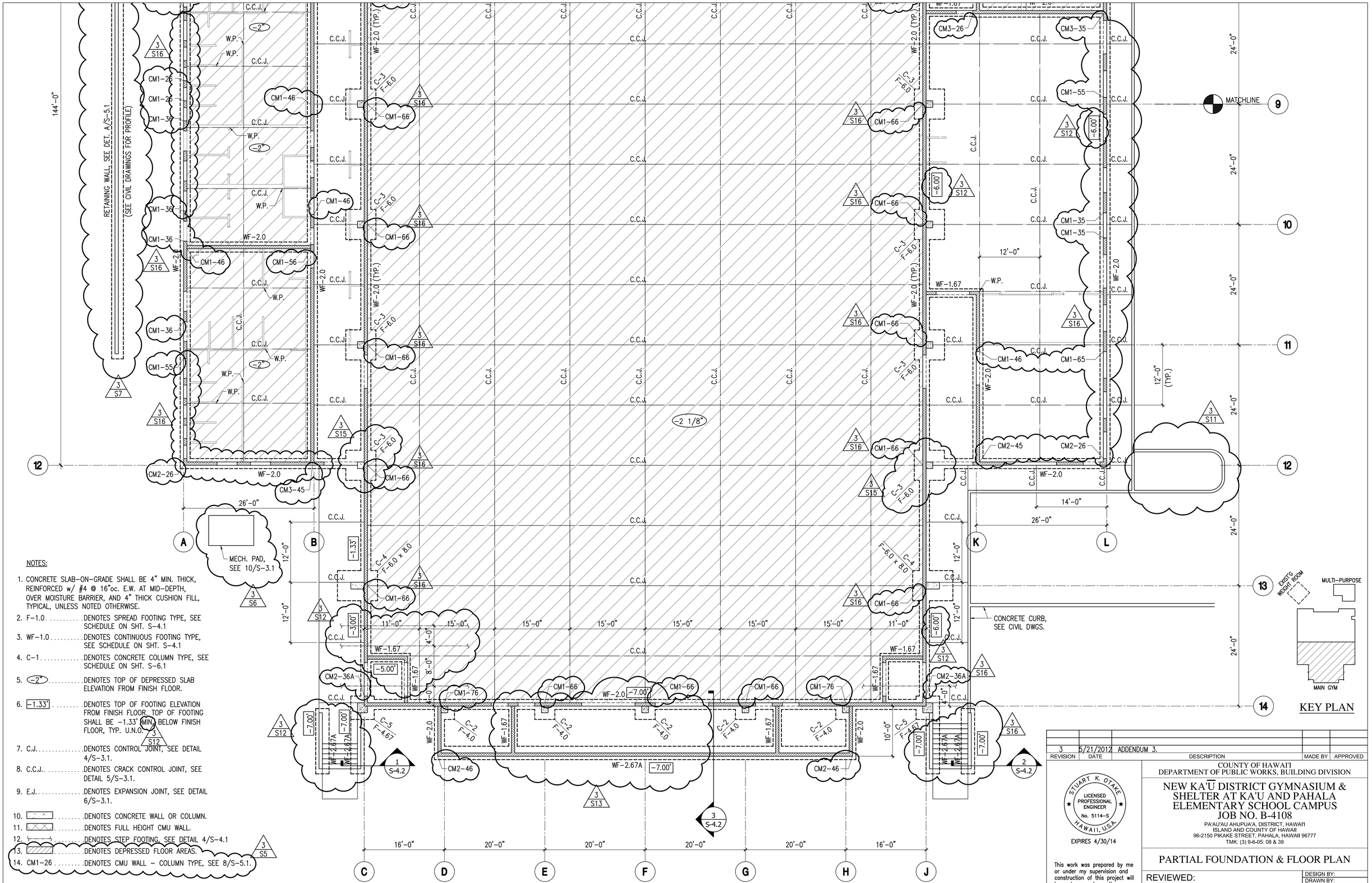

NOTES:

1. CONCRETE SLAB-ON-GRADE SHALL BE 4" MIN. THICK, REINFORCED w/ #4 @ 16"oc. E.W. AT MID-DEPTH, OVER MOISTURE BARRIER, AND 4" THICK CUSHION FILL, TYPICAL, UNLESS NOTED OTHERWISE.
2. F-1.0 ..... DENOTES SPREAD FOOTING TYPE, SEE SCHEDULE ON SHT. S-4.1
3. WF-1.0 ..... DENOTES CONTINUOUS FOOTING TYPE, SEE SCHEDULE ON SHT. S-4.1
4. C-1 ..... DENOTES CONCRETE COLUMN TYPE, SEE SCHEDULE ON SHT. S-6.1
5. -2" ..... DENOTES TOP OF DEPRESSED SLAB ELEVATION FROM FINISH FLOOR.
6. -1.33' ..... DENOTES TOP OF FOOTING ELEVATION FROM FINISH FLOOR. TOP OF FOOTING SHALL BE -1.33' MIN. BELOW FINISH FLOOR, TYP. U.N.O.
7. C.J. ..... DENOTES CONTROL JOINT, SEE DETAIL 4/S-3.1.
8. C.C.J. ..... DENOTES CRACK CONTROL JOINT, SEE DETAIL 5/S-3.1.
9. E.J. ..... DENOTES EXPANSION JOINT, SEE DETAIL 6/S-3.1.
10. ..... DENOTES CONCRETE WALL OR COLUMN.
11. ..... DENOTES FULL HEIGHT CMU WALL.
12. ..... DENOTES STEP FOOTING, SEE DETAIL 4/S-4.1
13. ..... DENOTES DEPRESSED FLOOR AREAS.
14. CM1-26 ..... DENOTES CMU WALL - COLUMN TYPE, SEE 8/S-5.1.

PARTIAL FOUNDATION PLAN

SC: 1/8"= 1'-0"

REVISION	DATE	DESCRIPTION	MADE BY	APPROVED
3	5/21/2012	ADDENDUM 3.		

STUART K. OTAKE
LICENSED PROFESSIONAL ENGINEER
No. 5114-S
HAWAII, U.S.A.
EXPIRES 4/30/14

This work was prepared by me or under my supervision and construction of this project will be under my observation.

MITSUNAGA & ASSOCIATES, INC.

COUNTY OF HAWAI'I
DEPARTMENT OF PUBLIC WORKS, BUILDING DIVISION

NEW KA'Ū DISTRICT GYMNASIUM & SHELTER AT KA'U AND PAHALA ELEMENTARY SCHOOL CAMPUS
JOB NO. B-4108
PA'AU'AU AHUPUA'A, DISTRICT, HAWAI'I
ISLAND AND COUNTY OF HAWAII
96-2150 PIKAKE STREET, PAHALA, HAWAII 96777
TMK: (3) 9-6-05: 08 & 39

PARTIAL FOUNDATION & FLOOR PLAN

REVIEWED:

DIVISION CHIEF
BUILDING DIVISION
DEPARTMENT OF PUBLIC WORKS

DATE
2012 APR-05

DESIGN BY:
DRAWN BY:
CHECKED BY:
SHEET NO.
S-1.1
111 OF 190 SHTS

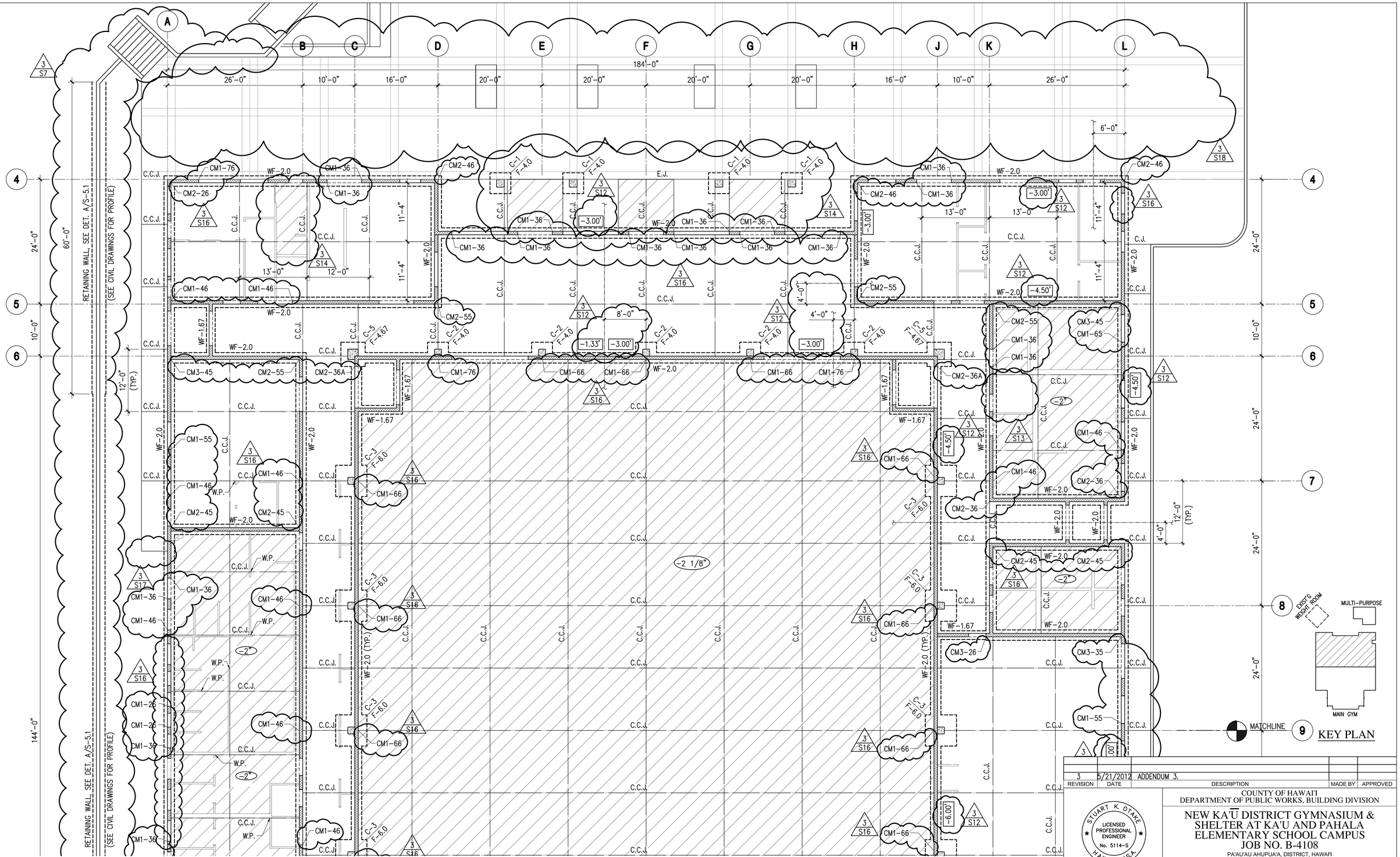

FOR NOTES, SEE SHEET S-1.1

PARTIAL FOUNDATION PLAN

SC: 1/8"= 1'-0"

REVISION	DATE	DESCRIPTION	MADE BY	APPROVED
3	5/21/2012	ADDENDUM 3.		

STUART K. OTAKE
LICENSED PROFESSIONAL ENGINEER
No. 5114-S
HAWAII, U.S.A.

EXPIRES 4/30/14

This work was prepared by me or under my supervision and construction of this project will be under my observation.

MITSUNAGA & ASSOCIATES, INC.

COUNTY OF HAWAI'I
DEPARTMENT OF PUBLIC WORKS, BUILDING DIVISION

NEW KA'Ū DISTRICT GYMNASIUM & SHELTER AT KA'U AND PAHALA ELEMENTARY SCHOOL CAMPUS
JOB NO. B-4108

PA'AU'AU AHUPUA'A, DISTRICT, HAWAI'I
ISLAND AND COUNTY OF HAWAII
96-2150 PIKAKE STREET, PAHALA, HAWAII 96777
TMK: (3) 9-6-05: 08 & 39

PARTIAL FOUNDATION & FLOOR PLAN

REVIEWED:

DIVISION CHIEF
BUILDING DIVISION
DEPARTMENT OF PUBLIC WORKS

DATE
2012 APR-05

DESIGN BY:
DRAWN BY:
CHECKED BY:

SHEET NO.
S-1.2
112 OF 190 SHTS

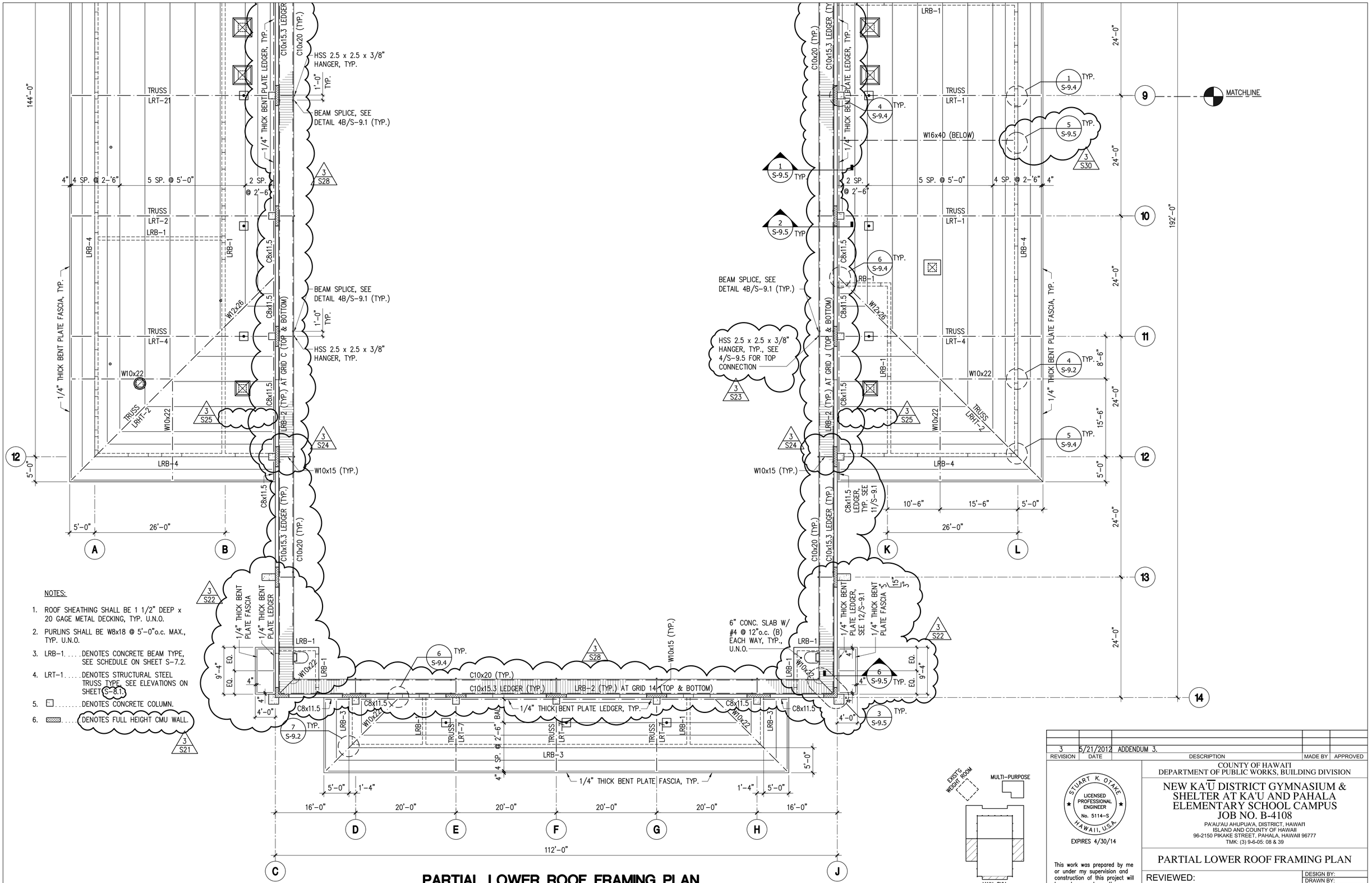

NOTES:

1. ROOF SHEATHING SHALL BE 1 1/2" DEEP x 20 GAGE METAL DECKING, TYP. U.N.O.
2. PURLINS SHALL BE W8x18 @ 5'-0"o.c. MAX., TYP. U.N.O.
3. LRB-1.....DENOTES CONCRETE BEAM TYPE, SEE SCHEDULE ON SHEET S-7.2.
4. LRT-1.....DENOTES STRUCTURAL STEEL TRUSS TYPE, SEE ELEVATIONS ON SHEET S-8.1.
5. .....DENOTES CONCRETE COLUMN.
6. .....DENOTES FULL HEIGHT CMU WALL.

PARTIAL LOWER ROOF FRAMING PLAN

SC: 1/8"= 1'-0"

KEY PLAN

REVISION	DATE	DESCRIPTION	MADE BY	APPROVED
3	5/21/2012	ADDENDUM 3.		

STUART K. OTAKE
LICENSED PROFESSIONAL ENGINEER
No. 5114-S
HAWAII, U.S.A.
EXPIRES 4/30/14

This work was prepared by me or under my supervision and construction of this project will be under my observation.

MITSUNAGA & ASSOCIATES, INC.

COUNTY OF HAWAI'I
DEPARTMENT OF PUBLIC WORKS, BUILDING DIVISION

NEW KA'Ū DISTRICT GYMNASIUM & SHELTER AT KA'U AND PAHALA ELEMENTARY SCHOOL CAMPUS
JOB NO. B-4108

PA'AU'AU AHUPUA'A, DISTRICT, HAWAI'I
ISLAND AND COUNTY OF HAWAII
96-2150 PIKAKE STREET, PAHALA, HAWAII 96777
TMK: (3) 9-6-05: 08 & 39

PARTIAL LOWER ROOF FRAMING PLAN

REVIEWED:

DIVISION CHIEF
BUILDING DIVISION
DEPARTMENT OF PUBLIC WORKS

DATE
2012 APR-05

DESIGN BY:
DRAWN BY:
CHECKED BY:

SHEET NO.
S-1.3
113 OF 190 SHTS

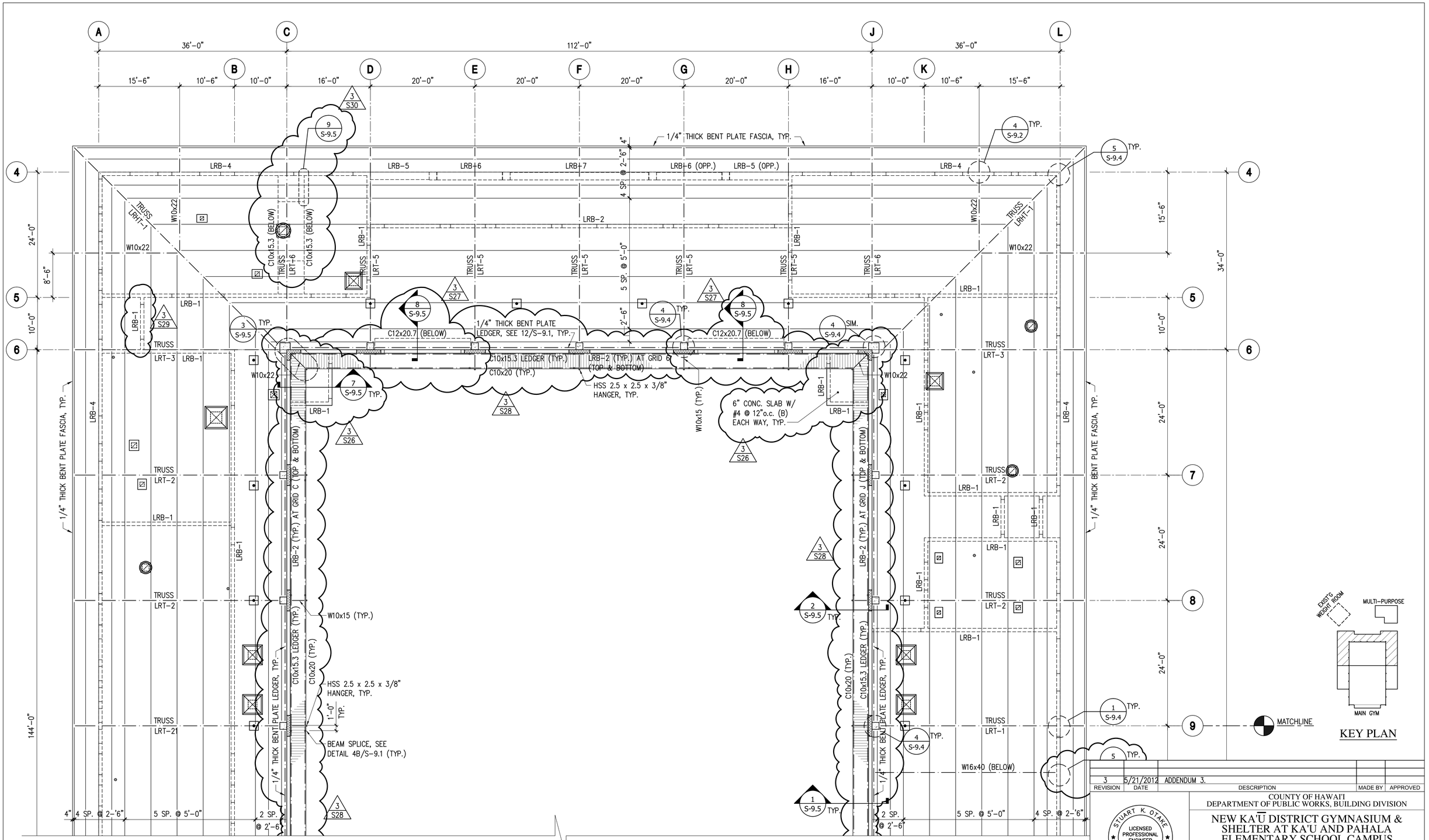

FOR NOTES, SEE SHEET S-1.3

PARTIAL LOWER ROOF FRAMING PLAN

SC: 1/8"= 1'-0"

REVISION	DATE	DESCRIPTION	MADE BY	APPROVED
3	5/21/2012	ADDENDUM 3.		

STUART K. OTAKE
LICENSED PROFESSIONAL ENGINEER
No. 5114-S
HAWAII, U.S.A.

EXPIRES 4/30/14

This work was prepared by me or under my supervision and construction of this project will be under my observation.

MITSUNAGA & ASSOCIATES, INC.

COUNTY OF HAWAI'I
DEPARTMENT OF PUBLIC WORKS, BUILDING DIVISION

NEW KA'Ū DISTRICT GYMNASIUM & SHELTER AT KA'U AND PAHALA ELEMENTARY SCHOOL CAMPUS
JOB NO. B-4108

PA'AU'AU AHUPUA'A, DISTRICT, HAWAI'I
ISLAND AND COUNTY OF HAWAII
96-2150 PIKAKE STREET, PAHALA, HAWAII 96777
TMK: (3) 9-6-05: 08 & 39

PARTIAL LOWER ROOF FRAMING PLAN

REVIEWED:

DIVISION CHIEF
BUILDING DIVISION
DEPARTMENT OF PUBLIC WORKS

DATE
2012 APR-05

DESIGN BY:
DRAWN BY:
CHECKED BY:

SHEET NO.
S-1.4
114 OF 190 SHTS

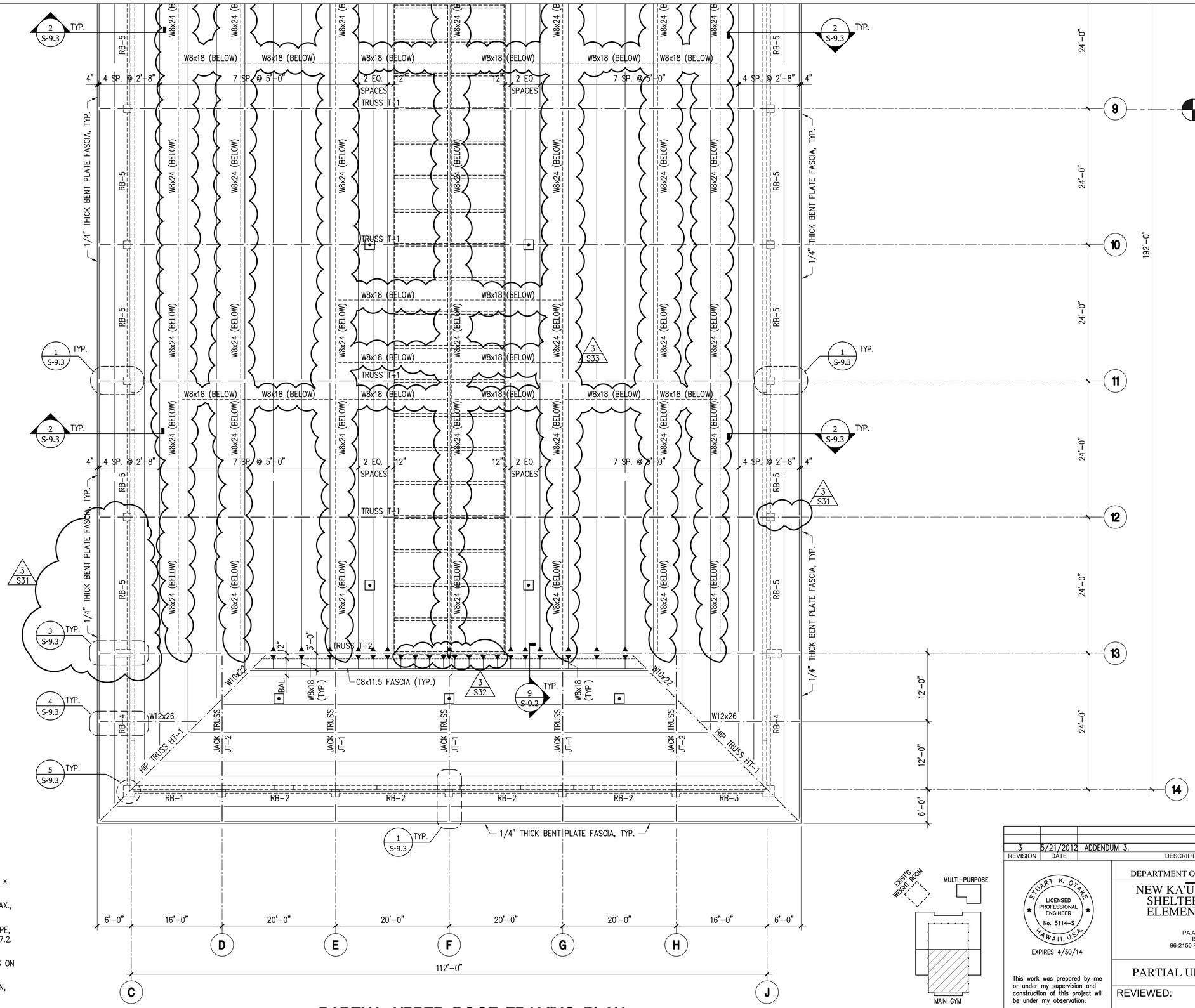

PARTIAL UPPER ROOF FRAMING PLAN

SC: 1/8"= 1'-0"

NOTES:

1. ROOF SHEATHING SHALL BE 1 1/2" DEEP x 20 GAGE METAL DECKING, TYP. U.N.O.
2. PURLINS SHALL BE W8x18 @ 5'-0"o.c. MAX., TYP. U.N.O.
3. RB-5 . . . . DENOTES CONCRETE BEAM TYPE, SEE SCHEDULE ON SHEET S-7.2.
4. T-1 . . . . . DENOTES STRUCTURAL STEEL TRUSS TYPE, SEE ELEVATIONS ON SHEET S-8.2.
5. ◄► . . . . . DENOTES MOMENT CONNECTION, SEE DETAIL 9/S-9.2.

KEY PLAN

REVISION	DATE	DESCRIPTION	MADE BY	APPROVED
3	6/21/2012	ADDENDUM 3.		

STUART K. OTAKE
LICENSED PROFESSIONAL ENGINEER
No. 5114-S
HAWAII, U.S.A.
EXPIRES 4/30/14

This work was prepared by me or under my supervision and construction of this project will be under my observation.

MITSUNAGA & ASSOCIATES, INC.

COUNTY OF HAWAI'I
DEPARTMENT OF PUBLIC WORKS, BUILDING DIVISION

NEW KA'Ū DISTRICT GYMNASIUM & SHELTER AT KA'U AND PAHALA ELEMENTARY SCHOOL CAMPUS
JOB NO. B-4108
PA'AU'AU AHUPUA'A, DISTRICT, HAWAI'I
ISLAND AND COUNTY OF HAWAII
96-2150 PIKAKE STREET, PAHALA, HAWAII 96777
TMK: (3) 9-6-05: 08 & 39

PARTIAL UPPER ROOF FRAMING PLAN

REVIEWED:

DIVISION CHIEF
BUILDING DIVISION
DEPARTMENT OF PUBLIC WORKS

DATE 2012 APR-05

DESIGN BY:
DRAWN BY:
CHECKED BY:

SHEET NO.
S-1.5
115 OF 190 SHTS

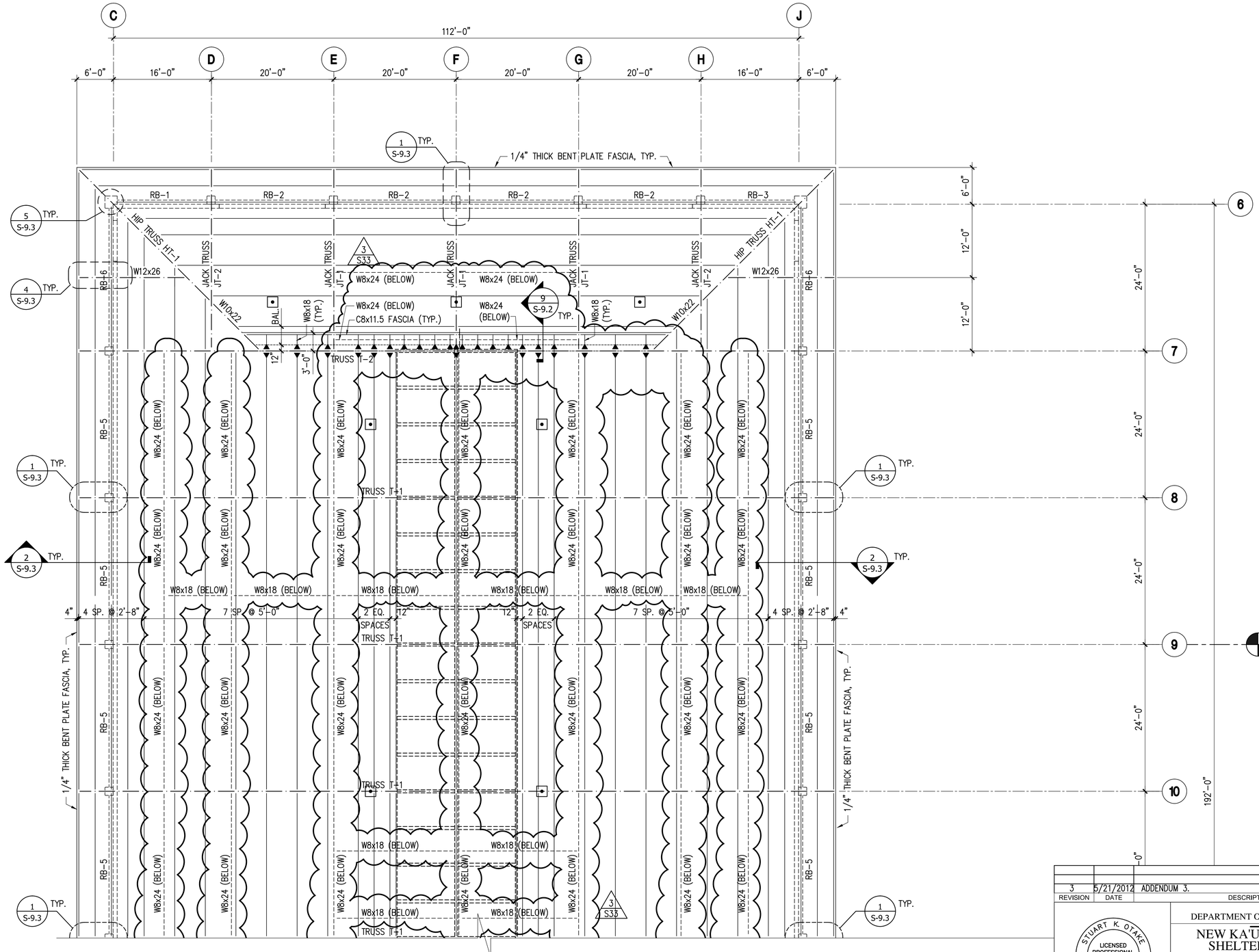

FOR NOTES, SEE SHEET S-1.5

PARTIAL UPPER ROOF FRAMING PLAN

SC: 1/8"= 1'-0"

REVISION	DATE	DESCRIPTION	MADE BY	APPROVED
3	5/21/2012	ADDENDUM 3.		

STUART K. OTAKE
LICENSED PROFESSIONAL ENGINEER
No. 5114-S
HAWAII, U.S.A.
EXPIRES 4/30/14

This work was prepared by me or under my supervision and construction of this project will be under my observation.

MITSUNAGA & ASSOCIATES, INC.

COUNTY OF HAWAI'I
DEPARTMENT OF PUBLIC WORKS, BUILDING DIVISION

NEW KA'Ū DISTRICT GYMNASIUM & SHELTER AT KA'U AND PAHALA ELEMENTARY SCHOOL CAMPUS
JOB NO. B-4108

PA'AU'AU AHUPUA'A, DISTRICT, HAWAI'I
ISLAND AND COUNTY OF HAWAII
96-2150 PIKAKE STREET, PAHALA, HAWAII 96777
TMK: (3) 9-6-05: 08 & 39

PARTIAL UPPER ROOF FRAMING PLAN

REVIEWED:

DIVISION CHIEF
BUILDING DIVISION
DEPARTMENT OF PUBLIC WORKS

DATE
2012 APR-05

DESIGN BY:
DRAWN BY:
CHECKED BY:

SHEET NO.
S-1.6
116 OF 190 SHTS

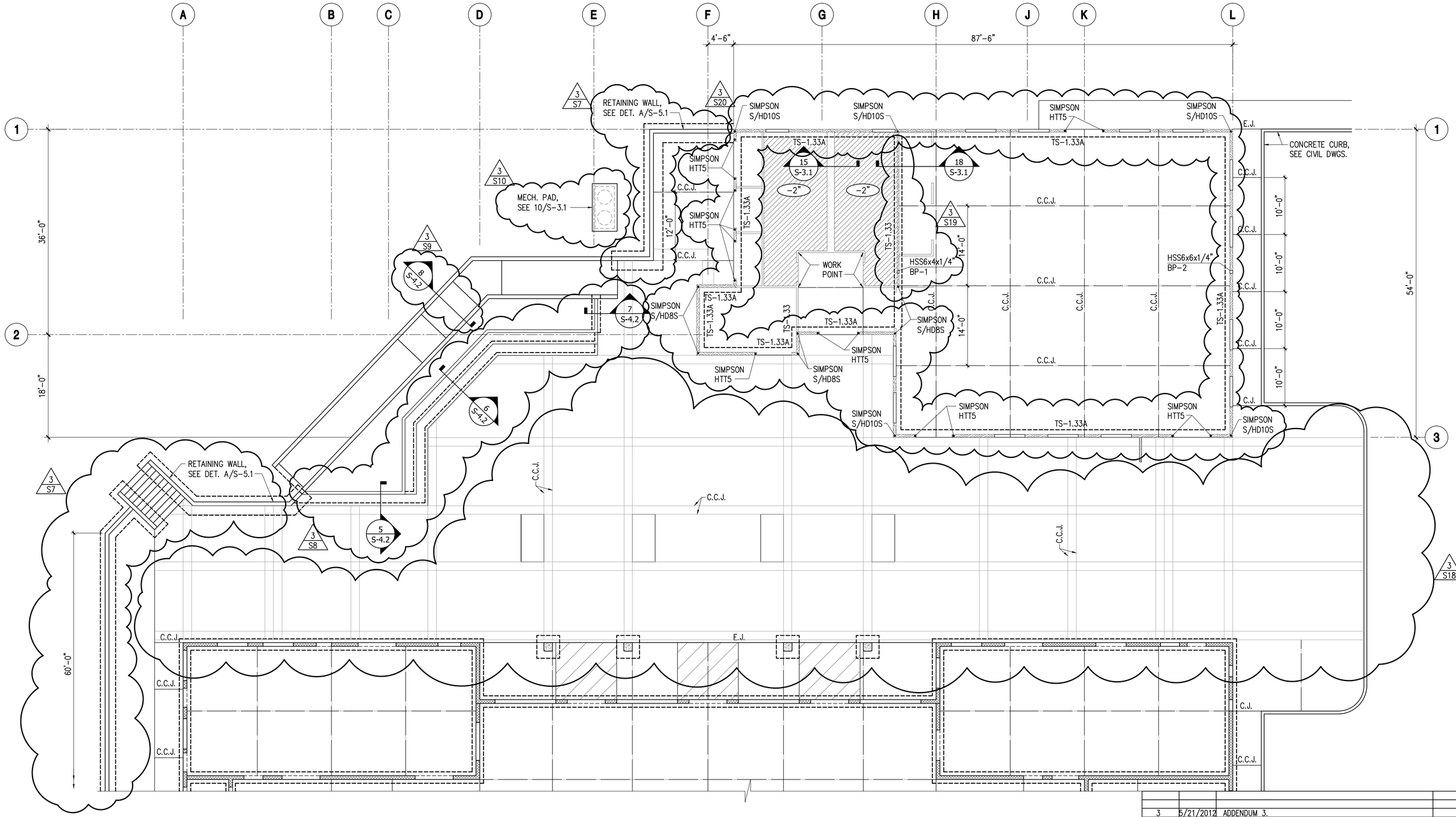

FOUNDATION and FLOOR PLAN

SC: 1/8"= 1'-0"

FOUNDATION AND SLAB-ON-GRADE NOTES:

1. SLAB-ON-GRADE SHALL BE 4" MIN. THICK, REINFORCED w/ #4 @ 16"oc. E.W. AT MID-DEPTH, OVER MOISTURE BARRIER, AND 4" THICK CUSHION FILL (#3 FINE), TYPICAL, UNLESS NOTED OTHERWISE.
2. TS-1.33. . . . . .DENOTES THICKENED SLAB CONTINUOUS FOOTING TYPE, SEE SCHEDULE ON SHEET S-4.1
3. RW-1. . . . . .DENOTES RETAINING WALL TYPE, SEE SCHEDULE ON SHEET S-5.1
4. C.J. . . . . .DENOTES CONTROL JOINT, SEE DETAIL 4/S-3.1
5. C.C.J. . . . . .DENOTES CRACK CONTROL JOINT, SEE DETAIL S-3.1
6. E.J. . . . . .DENOTES EXPANSION JOINT, SEE DETAIL 6/S-3.1
7. BP-1. . . . . .DENOTES BASE PLATE TYPE, SEE SCHEDULE S-9.1

LEGEND:

. . . DENOTES SHEARWALL WITH 2-LAYERS 1/2" THICK PLYWOOD SHEATHING, STRUCTURAL I, EXTERIOR GRADE WITH NO. 10 SCREWS @ 6"o.c. AT EDGES AND @ 12"o.c. AT INTERMEDIATE SUPPORTS.

(PROVIDE SIMPSON HTT4 HOLDOWN AT ALL WINDOW JAMB LOCATIONS UNLESS NOTED OTHERWISE.)

. . . DENOTES DEPRESSED SLAB AREAS.

-2" . . DENOTES SLAB DEPRESSION BELOW FINISH FLOOR.

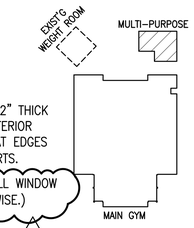

3 S20 KEY PLAN

REVISION	DATE	DESCRIPTION	MADE BY	APPROVED
3	5/21/2012	ADDENDUM 3.		

STUART K. OTAKE
LICENSED PROFESSIONAL ENGINEER
No. 5114-S
HAWAII, U.S.A.
EXPIRES 4/30/14

This work was prepared by me or under my supervision and construction of this project will be under my observation.

MITSUNAGA & ASSOCIATES, INC.

COUNTY OF HAWAI'I
DEPARTMENT OF PUBLIC WORKS, BUILDING DIVISION

NEW KA'Ū DISTRICT GYMNASIUM & SHELTER AT KA'U AND PAHALA ELEMENTARY SCHOOL CAMPUS
JOB NO. B-4108

PA'AU'AU AHUPUA'A, DISTRICT, HAWAI'I
ISLAND AND COUNTY OF HAWAII
96-2150 PIKAKE STREET, PAHALA, HAWAII 96777
TMK: (3) 9-6-05: 08 & 39

MULTI-PURPOSE ROOM FOUNDATON FLOOR PLAN

REVIEWED:

DIVISION CHIEF
BUILDING DIVISION
DEPARTMENT OF PUBLIC WORKS

DATE 2012 APR-05

DESIGN BY:
DRAWN BY:
CHECKED BY:

SHEET NO.
S-1.7
117 OF 190 SHTS

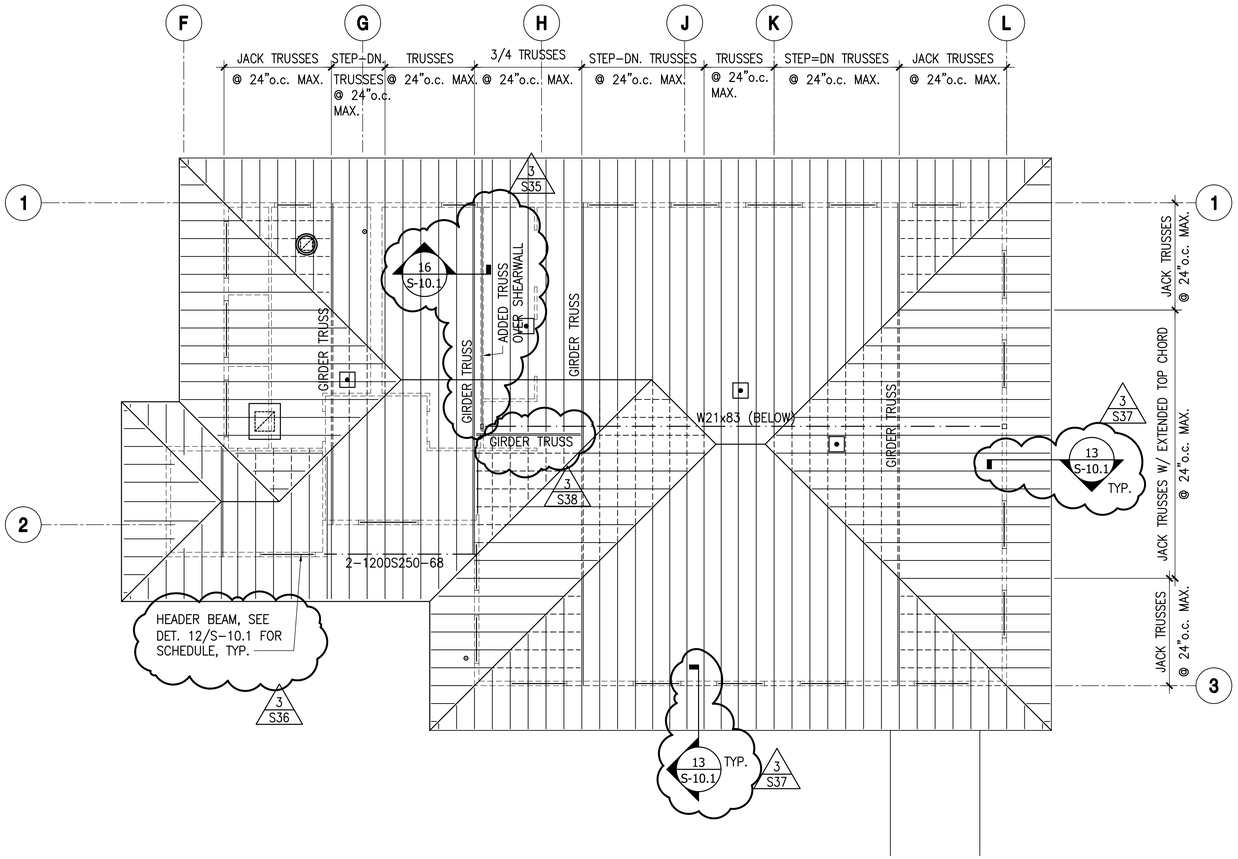

ROOF FRAMING PLAN

SC: 1/8"= 1'-0"

NOTES:

1. ROOF SHEATHING SHALL BE 3/4" THICK (T&G) FIRE TREATED PLYWOOD SHEATHING, STRUCTURAL I , WITH NO. 10 SCREWS @ 6"o.c. AT EDGES AND @ 12"o.c. AT INTERMEDIATE SUPPORTS. (3 / S34)
2. PRE-ENGINEERED LIGHT GAGE TRUSSES SHALL BE SPACED AT 24" MAXIMUM, UNLESS NOTED OTHERWISE.
3. . . . . DENOTES AREAS w/ FILL FRAMING OVER STRUCTURAL FRAMING BELOW.

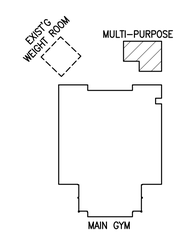

KEY PLAN

REVISION	DATE	DESCRIPTION	MADE BY	APPROVED
3	5/21/2012	ADDENDUM 3.		

STUART K. OTAKE
LICENSED PROFESSIONAL ENGINEER
No. 5114-S
HAWAII, U.S.A.
EXPIRES 4/30/14

This work was prepared by me or under my supervision and construction of this project will be under my observation.

MITSUNAGA & ASSOCIATES, INC.

COUNTY OF HAWAI'I
DEPARTMENT OF PUBLIC WORKS, BUILDING DIVISION

NEW KA'Ū DISTRICT GYMNASIUM & SHELTER AT KA'U AND PAHALA ELEMENTARY SCHOOL CAMPUS
JOB NO. B-4108

PA'AU'AU AHUPUA'A, DISTRICT, HAWAI'I
ISLAND AND COUNTY OF HAWAII
96-2150 PIKAKE STREET, PAHALA, HAWAII 96777
TMK: (3) 9-6-05: 08 & 39

MULTI-PURPOSE ROOM ROOF FRAMING PLAN

REVIEWED:

DIVISION CHIEF
BUILDING DIVISION
DEPARTMENT OF PUBLIC WORKS

DATE 2012 APR-05

DESIGN BY:
DRAWN BY:
CHECKED BY:

SHEET NO.
S-1.8
118 OF 190 SHTS

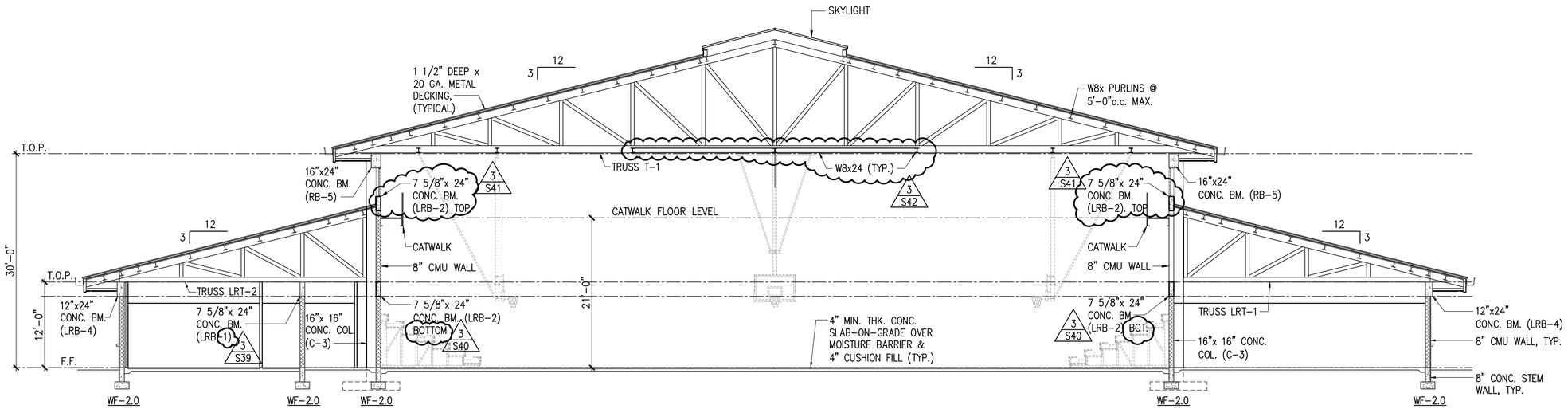

TRANSVERSE BUILDING SECTION

SC: 1/8"= 1'-0"

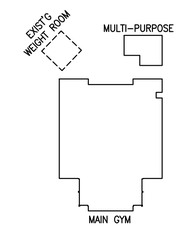

KEY PLAN

REVISION	DATE	DESCRIPTION	MADE BY	APPROVED
3	5/21/2012	ADDENDUM 3.		

STUART K. OTAKE
LICENSED PROFESSIONAL ENGINEER
No. 5114-S
HAWAII, U.S.A.

EXPIRES 4/30/14

This work was prepared by me or under my supervision and construction of this project will be under my observation.

MITSUNAGA & ASSOCIATES, INC.

COUNTY OF HAWAI'I
DEPARTMENT OF PUBLIC WORKS, BUILDING DIVISION

NEW KA'Ū DISTRICT GYMNASIUM & SHELTER AT KA'U AND PAHALA ELEMENTARY SCHOOL CAMPUS
JOB NO. B-4108

PA'AU'AU AHUPUA'A, DISTRICT, HAWAI'I
ISLAND AND COUNTY OF HAWAII
96-2150 PIKAKE STREET, PAHALA, HAWAII 96777
TMK: (3) 9-6-05: 08 & 39

TRANSVERSE BUILDING SECTION

REVIEWED:

DIVISION CHIEF
BUILDING DIVISION
DEPARTMENT OF PUBLIC WORKS

DATE
2012 APR-05

DESIGN BY:
DRAWN BY:
CHECKED BY:

SHEET NO.
S-2.1
119 OF 190 SHTS

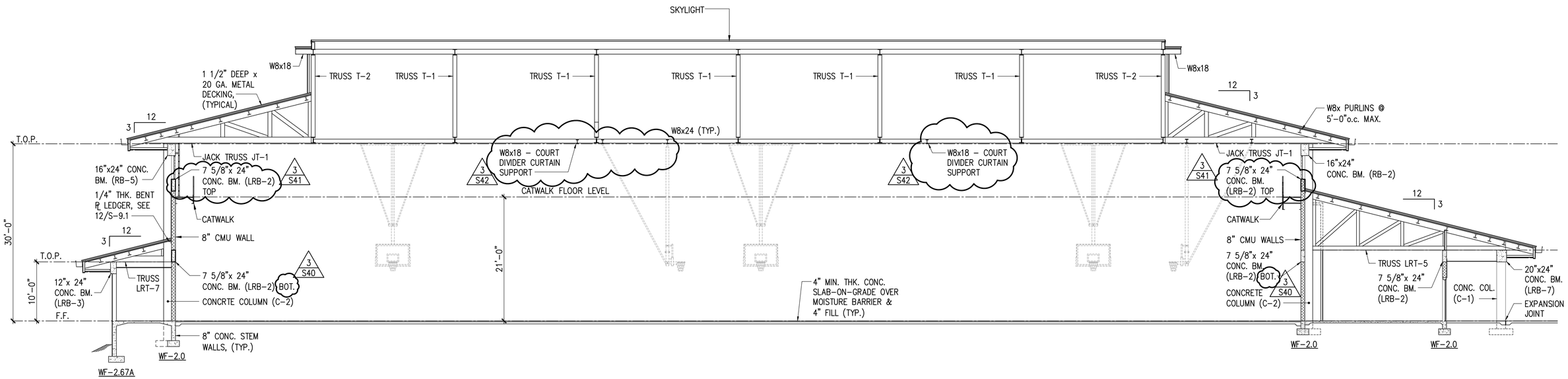

LONGITUDINAL BUILDING SECTION

SC: 1/8"= 1'-0"

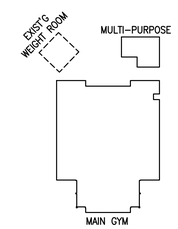

KEY PLAN

REVISION	DATE	DESCRIPTION	MADE BY	APPROVED
3	5/21/2012	ADDENDUM 3.		

STUART K. OTAKE
LICENSED PROFESSIONAL ENGINEER
No. 5114-S
HAWAII, U.S.A.

EXPIRES 4/30/14

This work was prepared by me or under my supervision and construction of this project will be under my observation.

MITSUNAGA & ASSOCIATES, INC.

COUNTY OF HAWAI'I
DEPARTMENT OF PUBLIC WORKS, BUILDING DIVISION

NEW KA'Ū DISTRICT GYMNASIUM & SHELTER AT KA'U AND PAHALA ELEMENTARY SCHOOL CAMPUS
JOB NO. B-4108

PA'AU'AU AHUPUA'A, DISTRICT, HAWAI'I
ISLAND AND COUNTY OF HAWAII
96-2150 PIKAKE STREET, PAHALA, HAWAII 96777
TMK: (3) 9-6-05: 08 & 39

LONGITUDINAL BUILDING SECTION

REVIEWED:

DIVISION CHIEF
BUILDING DIVISION
DEPARTMENT OF PUBLIC WORKS

DATE
2012 APR-05

DESIGN BY:
DRAWN BY:
CHECKED BY:

SHEET NO.
S-2.2
120 OF 190 SHTS

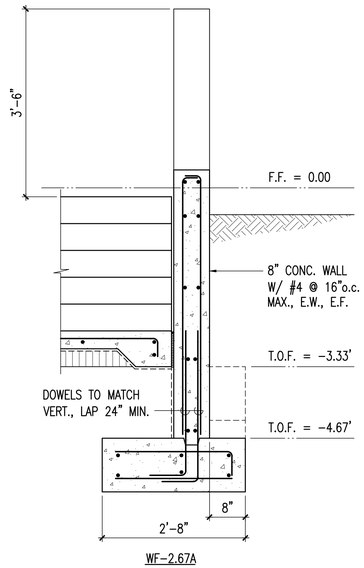

1 TYPICAL SECTION AT STAIR
SC: 3/4" = 1'-0"

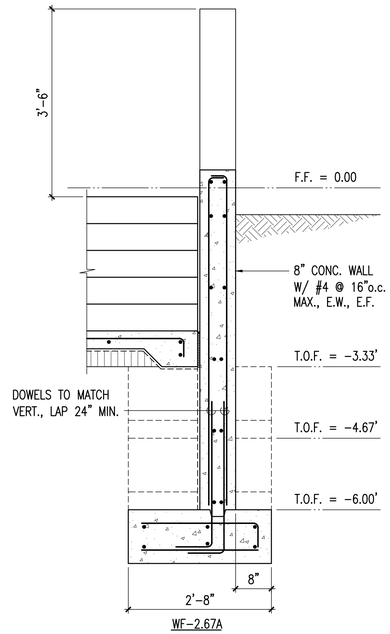

2 WALL SECTION AT STAIR
SC: 3/4" = 1'-0"

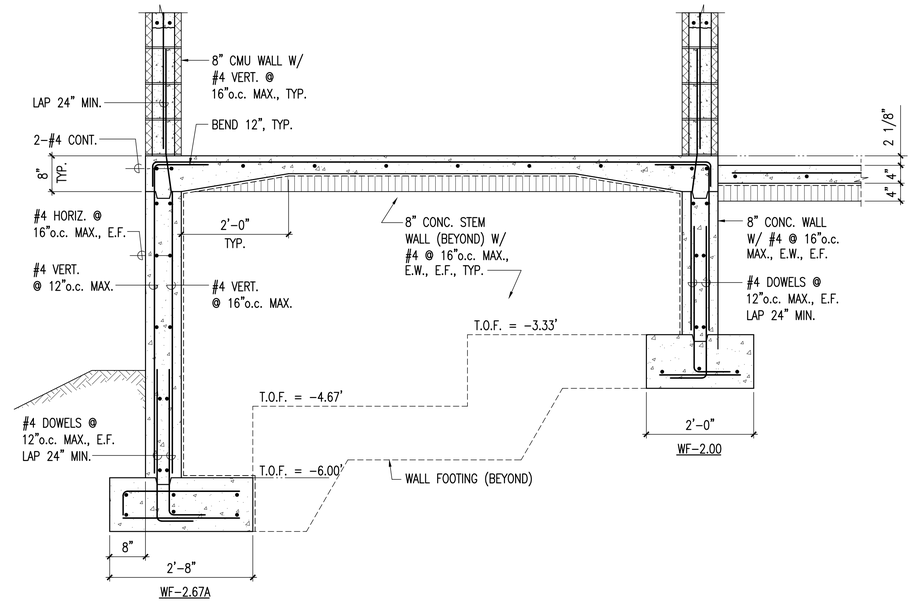

3 TYPICAL WALL SECTION AT GYM EQUIPMEMT STORAGE
SC: 3/4" = 1'-0"

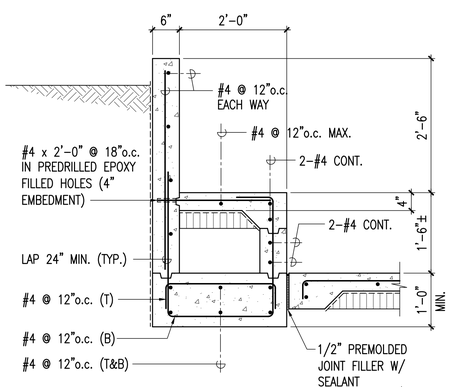

3 S43

5 EXTERIOR BENCH SECTION
SC: 3/4" = 1'-0"

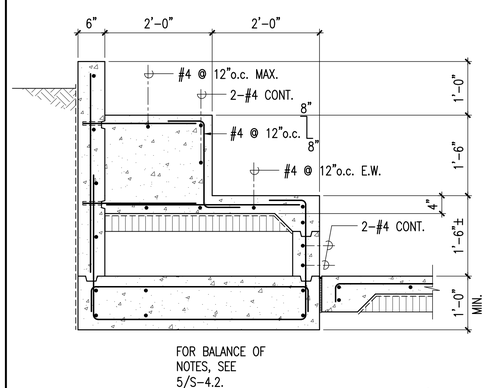

3 S44

6 EXTERIOR BENCH SECTION
SC: 3/4" = 1'-0"

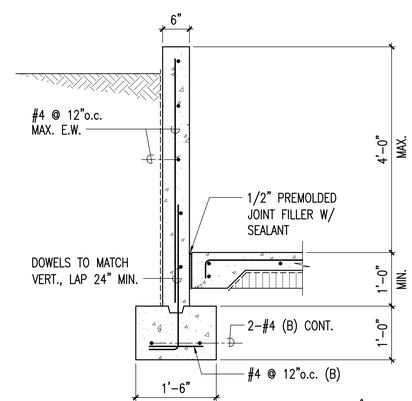

3 S45

7 PLANTER WALL SECTION
SC: 3/4" = 1'-0"

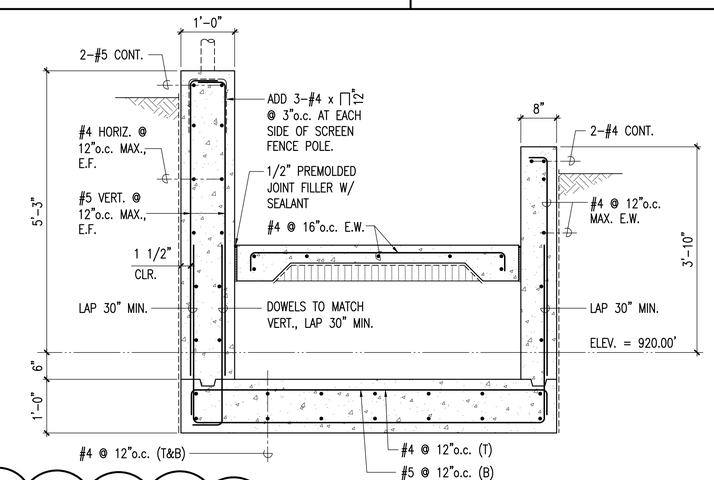

3 S46

8 SECTION THRU RAMP
SC: 3/4" = 1'-0"

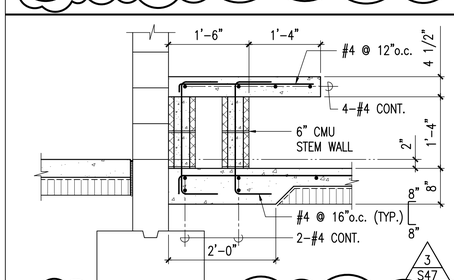

3 S47

9 CONCRETE BENCH DETAIL
SC: 3/4" = 1'-0"

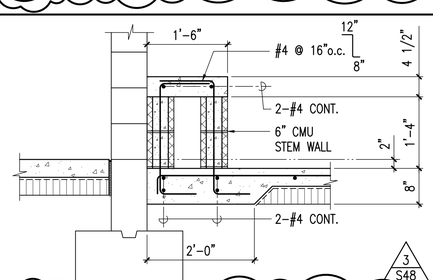

3 S48

10 CONCRETE BENCH DETAIL
SC: 3/4" = 1'-0"

REVISION	DATE	DESCRIPTION	MADE BY	APPROVED
3	5/21/2012	ADDENDUM 3.		

STUART K. OTAKE
LICENSED PROFESSIONAL ENGINEER
No. 5114-S
HAWAII, U.S.A.
EXPIRES 4/30/14

This work was prepared by me or under my supervision and construction of this project will be under my observation.

MITSUNAGA & ASSOCIATES, INC.

COUNTY OF HAWAI'I
DEPARTMENT OF PUBLIC WORKS, BUILDING DIVISION

NEW KA'Ū DISTRICT GYMNASIUM & SHELTER AT KA'U AND PAHALA ELEMENTARY SCHOOL CAMPUS
JOB NO. B-4108
PA'AU'AU AHUPUA'A, DISTRICT, HAWAI'I
ISLAND AND COUNTY OF HAWAII
96-2150 PIKAKE STREET, PAHALA, HAWAII 96777
TMK: (3) 9-6-05: 08 & 39

FOUNDATION SECTIONS AND DETAILS

REVIEWED:

DIVISION CHIEF
BUILDING DIVISION
DEPARTMENT OF PUBLIC WORKS

DATE
2012 APR-05

DESIGN BY:
DRAWN BY:
CHECKED BY:
SHEET NO.
S-4.2
123 OF 190 SHTS

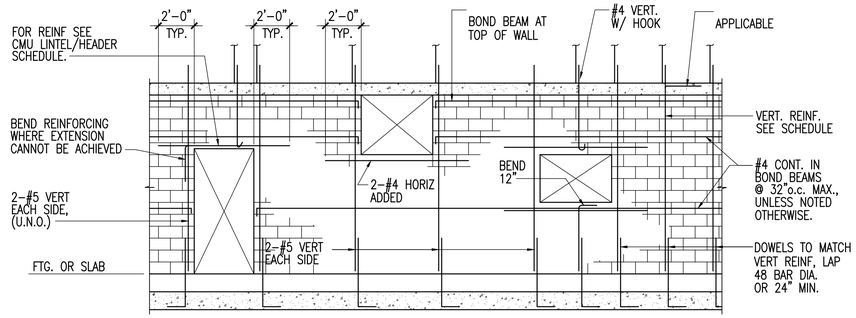

1 TYPICAL CMU WALL ELEVATION

N.T.S.

CMU WALL REINF. SCHEDULE	
WALL TH'K	REINFORCING, TYPICAL UNLESS NOTED OTHERWISE
6"	VERT. #4 @ 16" HORIZ. #4 @ 32"
8"	VERT. #4 @ 16" HORIZ. 2-#4 @ 32"
12"	VERT. 2-#4 @ 24" OR #5 @ 16" HORIZ. 2-#4 @ 32"

NOTES:

1. REINFORCING SHOWN ARE MINIMUM.
2. SEE PLANS, ELEVATIONS, SECTIONS AND DETAILS FOR WALLS REQUIRING ADDITIONAL REINFORCING.
3. ALL CELLS SHALL BE GROUTED SOLID, TYPICAL UNLESS NOTED OTHERWISE

2 CMU WALL SCHEDULE

N.T.S.

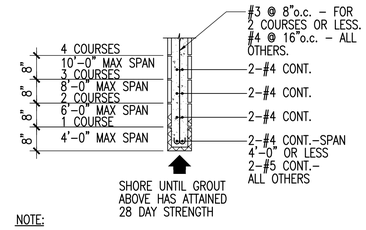

NOTE:

1. REINFORCING SHOWN ARE MINIMUM.
2. EXTEND ALL BARS 2'-0" MIN. BEYOND OPENING. WHERE EXTENSION IS NOT POSSIBLE, BEND 90° UP, DOWN OR INTO PERPENDICULAR WALL.
3. SOLID GROUT ALL CELLS.

3 CMU LINTEL / HEADER SCHEDULE

N.T.S.

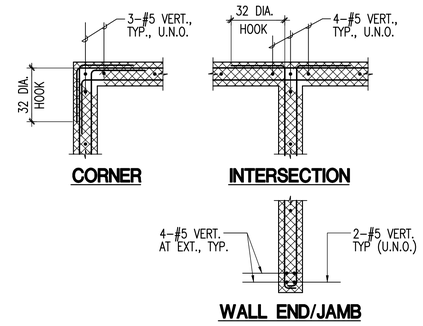

4 TYPICAL CMU WALL DETAILS

N.T.S.

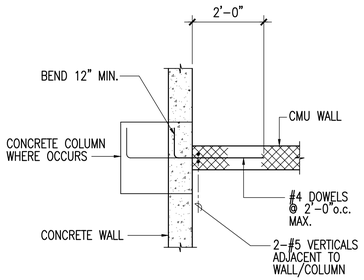

PLAN

5 CMU WALL ABUTTING CONC. WALL/COL.

N.T.S.

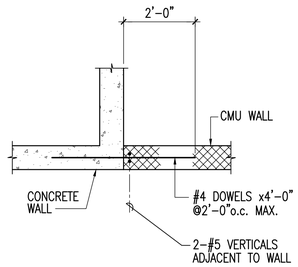

PLAN

6 CMU WALL ABUTTING CONC. WALL

N.T.S.

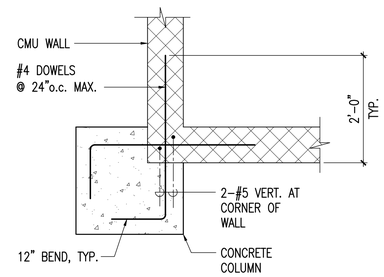

7 CMU WALL ABUTTING CONC. COLUMN AT CORNER

N.T.S.

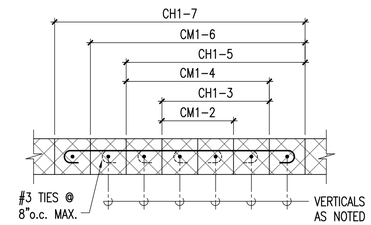

CM1 (ONE DIRECTION)

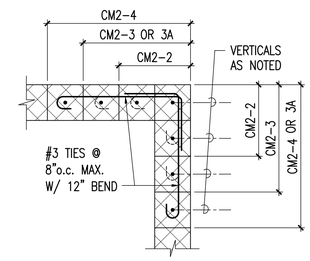

CM2 (TWO DIRECTION)

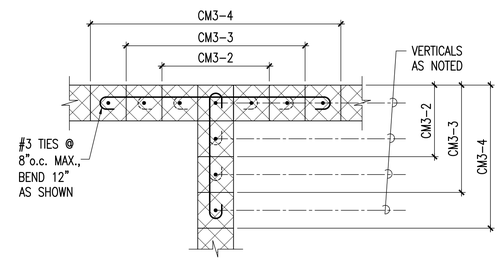

CM3 (THREE DIRECTION)

LEGEND

CM1-45

- VERTICAL REBAR SIZE IN EACH CELL - (2) DENOTES 2 VERTICAL BARS IN EACH CELL
- NUMBER OF CELLS WITH VERTICAL REBAR (FROM CORNER OR INTERSECTION AS SHOWN)
- TYPE (NUMBER OF DIRECTIONS)

3 S50

8 TYPICAL CMU WALL-COLUMN DETAILS

N.T.S.

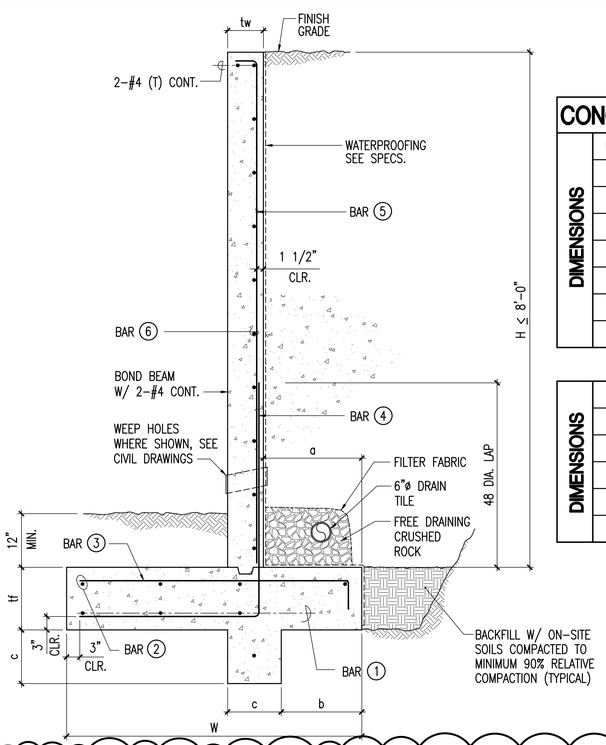

CONC. RETAINING WALL SCHEDULE						
DIMENSIONS	H (MAX.)	4'-0"	5'-0"	6'-0"	7'-0"	8'-0"
	tw	0'-8"	0'-8"	0'-8"	0'-8"	0'-8"
	W	2'-4"	2'-8"	3'-4"	4'-0"	4'-8"
	t_f	1'-0"	1'-0"	1'-2"	1'-4"	1'-6"
	a	0'-8"	0'-10"	1'-0"	1'-2"	1'-4"
	b	-	1'-0"	1'-0"	1'-0"	1'-2"
	c	-	0'-6"	0'-8"	0'-10"	1'-0"

DIMENSIONS						
	BAR 1	2-#4	2-#4	3-#4	3-#4	4-#4
	BAR 2	3-#4	3-#4	4-#4	4-#4	5-#4
	BAR 3	#4 @ 12"	#4 @ 12"	#5 @ 12"	#5 @ 12"	#5 @ 12"
	BAR 4	#4 @ 12"	#4 @ 12"	#5 @ 12"	#5 @ 12"	#6 @ 12"
	BAR 5	#4 @ 12"	#4 @ 12"	#4 @ 12"	#4 @ 12"	#5 @ 12"
	BAR 6	#4 @ 12"	#4 @ 12"	#4 @ 12"	#4 @ 12"	#4 @ 12"

3 S49

A TYPICAL CONCRETE RETAINING WALL SCHEDULE

SC: 3/4" = 1'-0"

REVISION	DATE	DESCRIPTION	MADE BY	APPROVED
3	5/21/2012	ADDENDUM 3.		

STUART K. OTAKE
LICENSED PROFESSIONAL ENGINEER
No. 5114-S
HAWAII, U.S.A.
EXPIRES 4/30/14

This work was prepared by me or under my supervision and construction of this project will be under my observation.

MITSUNAGA & ASSOCIATES, INC.

COUNTY OF HAWAI'I
DEPARTMENT OF PUBLIC WORKS, BUILDING DIVISION

NEW KA'Ū DISTRICT GYMNASIUM & SHELTER AT KA'U AND PAHALA ELEMENTARY SCHOOL CAMPUS
JOB NO. B-4108

PA'AU'AU AHUPUA'A, DISTRICT, HAWAI'I
ISLAND AND COUNTY OF HAWAII
96-2150 PIKAKE STREET, PAHALA, HAWAII 96777
TMK: (3) 9-6-05: 08 & 39

TYPICAL CMU WALL SCHEDULE AND DETAILS

REVIEWED:

DIVISION CHIEF
BUILDING DIVISION
DEPARTMENT OF PUBLIC WORKS

DATE 2012 APR-05

DESIGN BY:
DRAWN BY:
CHECKED BY:

SHEET NO.
S-5.1
124 OF 190 SHTS

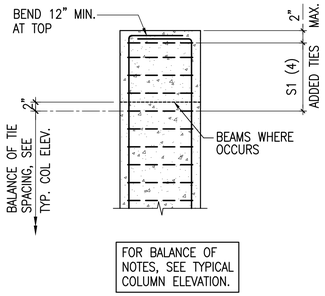

X TYPICAL ADDED TIES AT BEAM AND COLUMN INTERSECTION

NTS

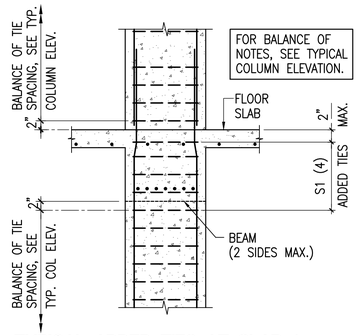

Y TYPICAL ADDED TIES AT SLAB / BEAM & COLUMN INTERSECTION

NTS

COLUMN SCHEDULE

UPPER ROOF												
LOWER ROOF		SIZE										
		VERT.										
		TIES										
		DETAIL										
		MARK										
FOUNDATION	4,000 PSI	SIZE	16"x16"	16"x16"	16"x16"	16"x32"	24"x24"					
		VERT.	8-#6	8-#7	8-#8	12-#9	12-#8					
		TIES	#4	#4	#4	#4	#4					
		DETAIL				3 S51						
		MARK	TYPE A	TYPE A	TYPE A	TYPE B	TYPE C					
LEVEL	CONCRETE STRENGTH	TYPE	C-1	C-2	C-3	C-4	C-5					
		REMARKS										

NOTES:( )

1. 'H' CLEAR COLUMN HEIGHT.
2. 'h' GREATER OF: 1/6 x 'H'
   MAX. COLUMN DIMENSION 18"
3. S1 TIE SPACING NOT GREATER THAN (U.N.O. ON SCHEDULE):
   8 BAR DIAMETERS
   24 TIE DIAMETERS
   1/2 LEAST COLUMN DIMENSION
4. S2 TIE SPACING NOT GREATER THAN (U.N.O. ON SCHEDULE):
   16 BAR DIAMETERS
   48 TIE DIAMETERS
   LEAST COLUMN DIMENSION

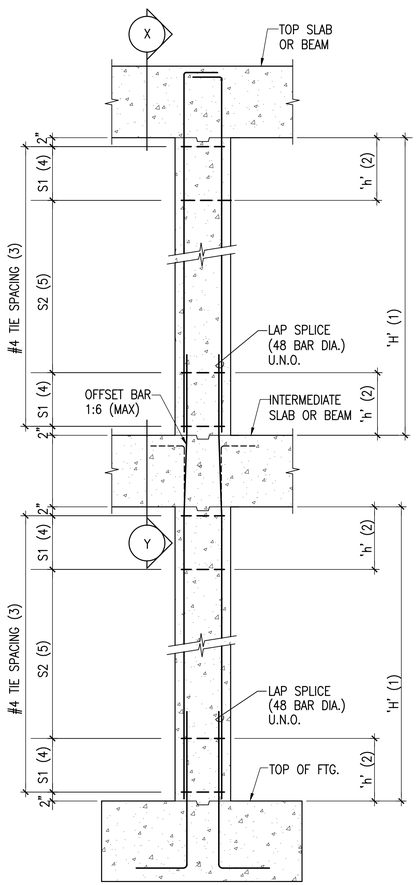

1 TYPICAL MULTI-STORY ELEVATION

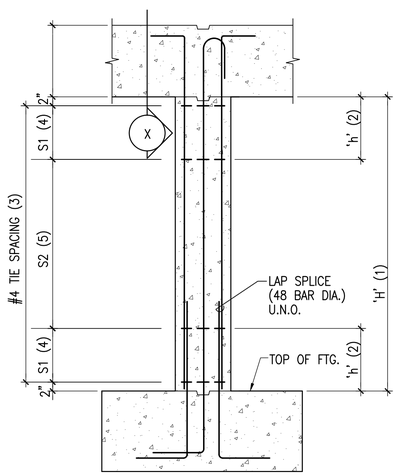

2 TYPICAL 1-STORY ELEVATION

A TYPICAL CONCRETE COLUMN SCHEMATIC ELEVATIONS AND DETAILS

NOT TO SCALE

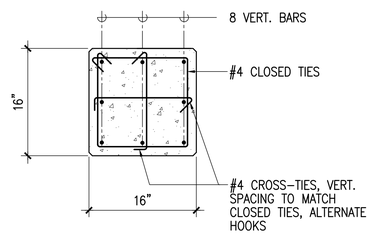

TYPE A

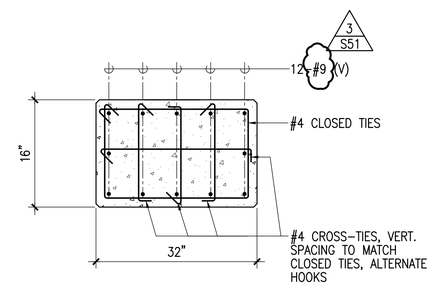

TYPE B

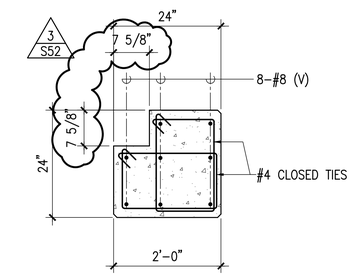

TYPE C

REVISION	DATE	DESCRIPTION	MADE BY	APPROVED
3	5/21/2012	ADDENDUM 3.		

STUART K. OTAKE
LICENSED PROFESSIONAL ENGINEER
No. 5114-S
HAWAII, U.S.A.
EXPIRES 4/30/14

This work was prepared by me or under my supervision and construction of this project will be under my observation.

MITSUNAGA & ASSOCIATES, INC.

COUNTY OF HAWAI'I
DEPARTMENT OF PUBLIC WORKS, BUILDING DIVISION

NEW KA'Ū DISTRICT GYMNASIUM & SHELTER AT KA'U AND PAHALA ELEMENTARY SCHOOL CAMPUS
JOB NO. B-4108

PA'AU'AU AHUPUA'A, DISTRICT, HAWAI'I
ISLAND AND COUNTY OF HAWAII
96-2150 PIKAKE STREET, PAHALA, HAWAII 96777
TMK: (3) 9-6-05: 08 & 39

TYPICAL CONCRETE COLUMN SCHEDULE AND DETAILS

REVIEWED:

DIVISION CHIEF
BUILDING DIVISION
DEPARTMENT OF PUBLIC WORKS

DATE 2012 APR-05

DESIGN BY:
DRAWN BY:
CHECKED BY:

SHEET NO.
S-6.1
125 OF 190 SHTS

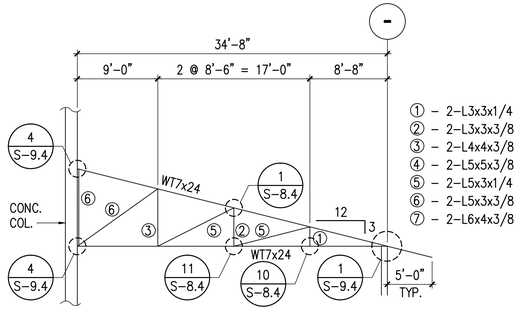

TRUSS TYPE LRT-1

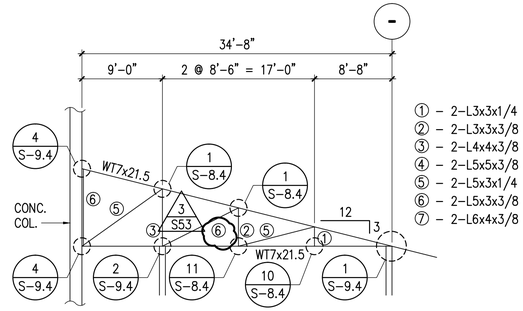

TRUSS TYPE LRT-2

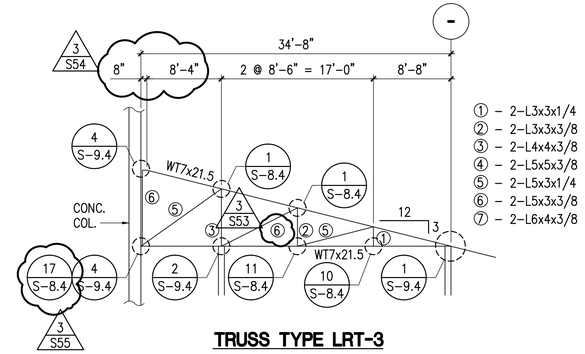

TRUSS TYPE LRT-3

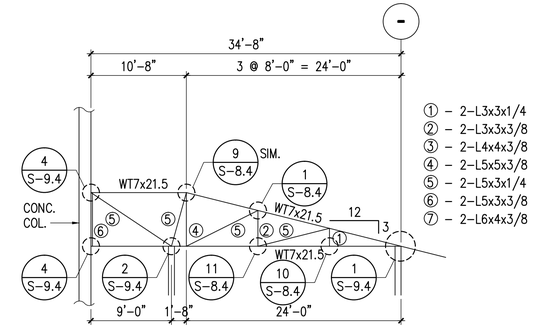

TRUSS TYPE LRT-4

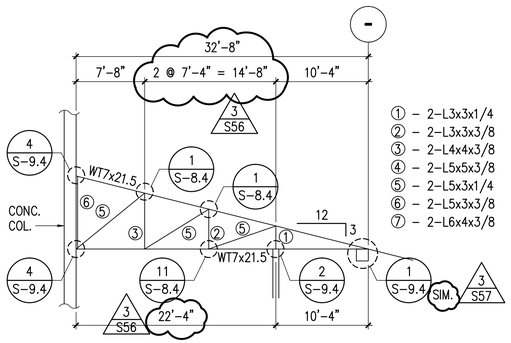

TRUSS TYPE LRT-5

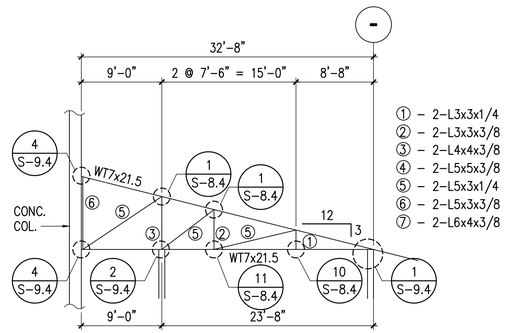

TRUSS TYPE LRT-6

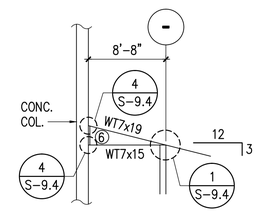

TRUSS TYPE LRT-7

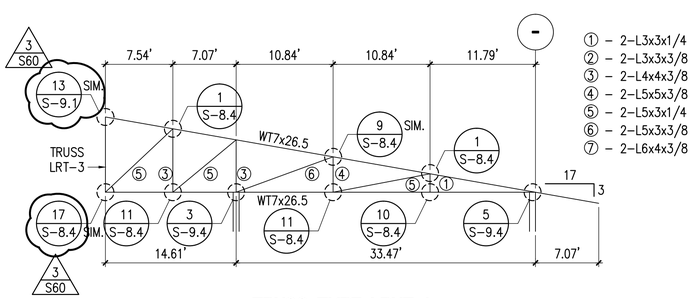

TRUSS TYPE LRHT-1

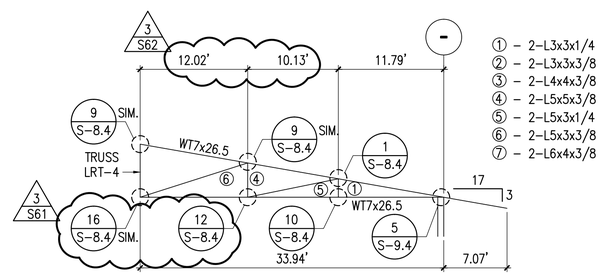

TRUSS TYPE LRHT-2

REVISION	DATE	DESCRIPTION	MADE BY	APPROVED
3	5/21/2012	ADDENDUM 3.		

STUART K. OTAKE
LICENSED PROFESSIONAL ENGINEER
No. 5114-S
HAWAII, U.S.A.
EXPIRES 4/30/14

This work was prepared by me or under my supervision and construction of this project will be under my observation.

MITSUNAGA & ASSOCIATES, INC.

COUNTY OF HAWAI'I
DEPARTMENT OF PUBLIC WORKS, BUILDING DIVISION

NEW KA'Ū DISTRICT GYMNASIUM & SHELTER AT KA'U AND PAHALA ELEMENTARY SCHOOL CAMPUS
JOB NO. B-4108

PA'AU'AU AHUPUA'A, DISTRICT, HAWAI'I
ISLAND AND COUNTY OF HAWAII
96-2150 PIKAKE STREET, PAHALA, HAWAII 96777
TMK: (3) 9-6-05: 08 & 39

TRUSS ELEVATIONS - LOWER ROOF

REVIEWED:

DIVISION CHIEF
BUILDING DIVISION
DEPARTMENT OF PUBLIC WORKS

DATE
2012 APR-05

DESIGN BY:
DRAWN BY:
CHECKED BY:
SHEET NO.
S-8.1
128 OF 190 SHTS

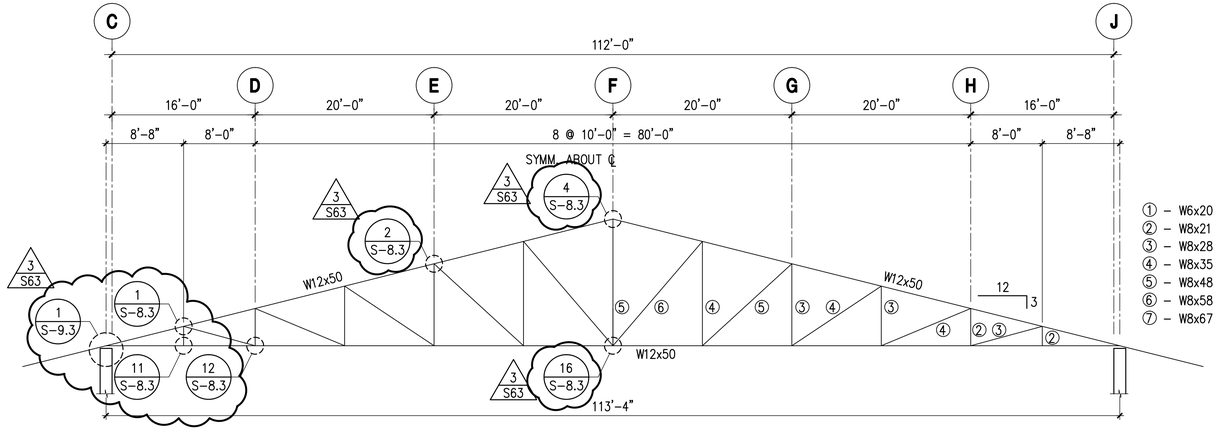

TRUSS TYPE T-1

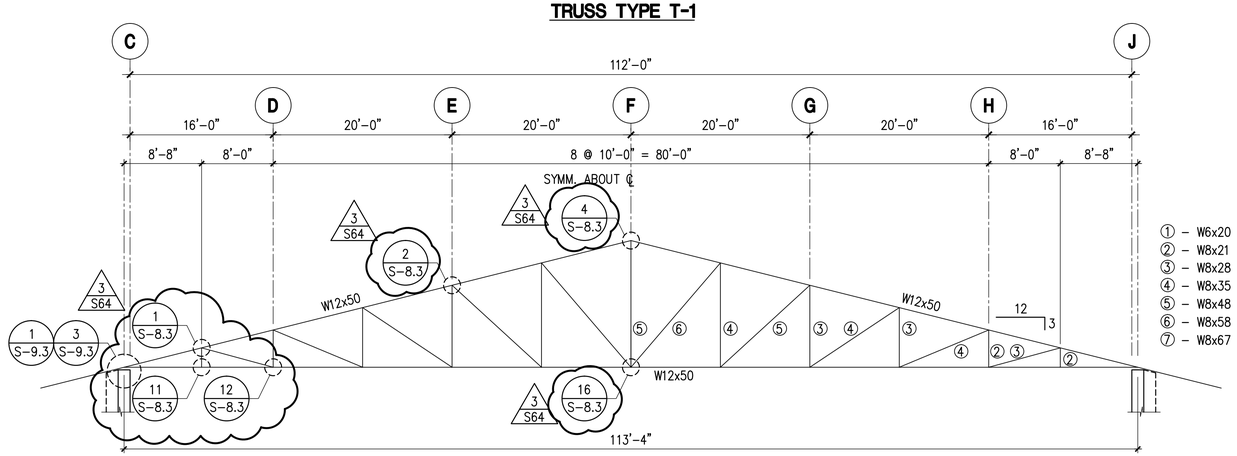

TRUSS TYPE T-2

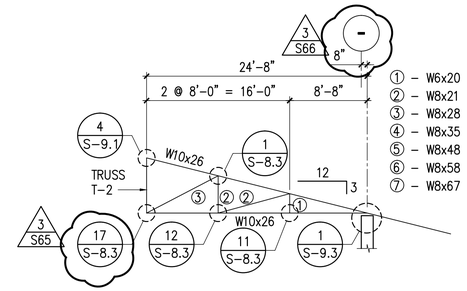

TRUSS TYPE JT-1

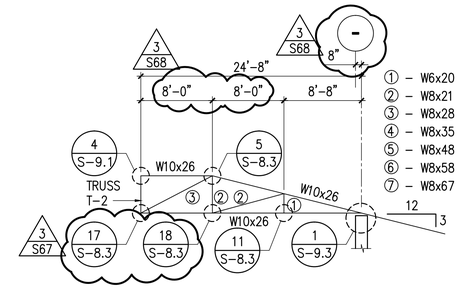

TRUSS TYPE JT-2

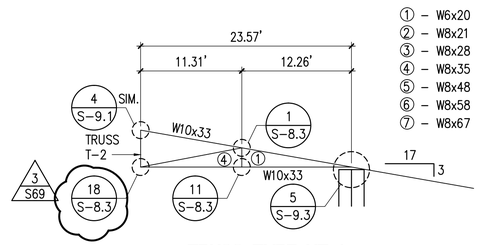

TRUSS TYPE HT-1

REVISION	DATE	DESCRIPTION	MADE BY	APPROVED
3	5/21/2012	ADDENDUM 3.		

STUART K. OTAKE
LICENSED PROFESSIONAL ENGINEER
No. 5114-S
HAWAII, U.S.A.

EXPIRES 4/30/14

This work was prepared by me or under my supervision and construction of this project will be under my observation.

MITSUNAGA & ASSOCIATES, INC.

COUNTY OF HAWAI'I
DEPARTMENT OF PUBLIC WORKS, BUILDING DIVISION

NEW KA'Ū DISTRICT GYMNASIUM & SHELTER AT KA'U AND PAHALA ELEMENTARY SCHOOL CAMPUS
JOB NO. B-4108

PA'AU'AU AHUPUA'A, DISTRICT, HAWAI'I
ISLAND AND COUNTY OF HAWAII
96-2150 PIKAKE STREET, PAHALA, HAWAII 96777
TMK: (3) 9-6-05: 08 & 39

TRUSS ELEVATIONS - UPPER ROOF

REVIEWED:

DIVISION CHIEF
BUILDING DIVISION
DEPARTMENT OF PUBLIC WORKS

DATE
2012 APR-05

DESIGN BY:
DRAWN BY:
CHECKED BY:

SHEET NO.
S-8.2
129 OF 190 SHTS

NOTE:
ALL CONNECTIONS SHALL BE 3/16" FILLET WELDS, ALL AROUND TYP., U.N.O.

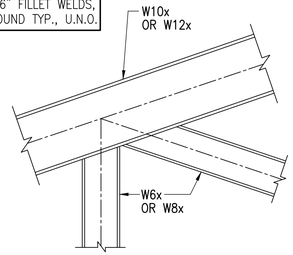

1 **DETAIL**
SC: 1" = 1'-0"

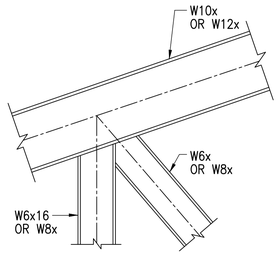

2 **DETAIL**
SC: 1" = 1'-0"

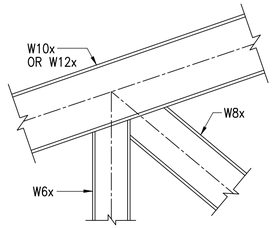

3 **DETAIL**
SC: 1" = 1'-0"

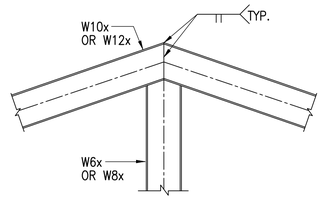

4 **DETAIL**
SC: 1" = 1'-0"

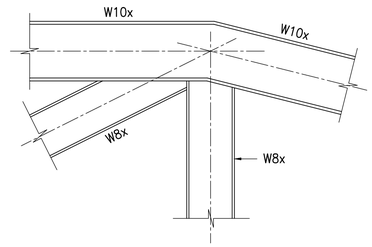

3
S70

5 **DETAIL**
SC: 1" = 1'-0"

6 **DETAIL**
SC: 1" = 1'-0"

NOTE:
ALL CONNECTIONS SHALL BE 3/16" FILLET WELDS, ALL AROUND TYP., U.N.O.

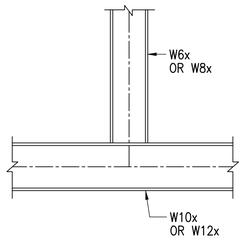

11 **DETAIL**
SC: 1" = 1'-0"

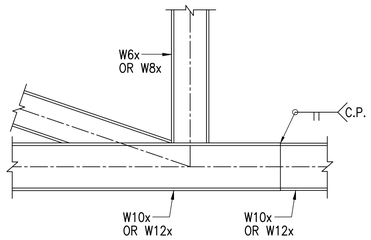

12 **DETAIL**
SC: 1" = 1'-0"

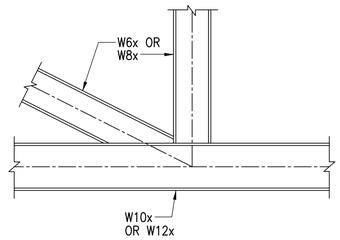

13 **DETAIL**
SC: 1" = 1'-0"

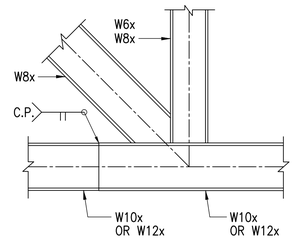

14 **DETAIL**
SC: 1" = 1'-0"

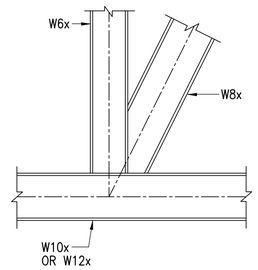

15 **DETAIL**
SC: 1" = 1'-0"

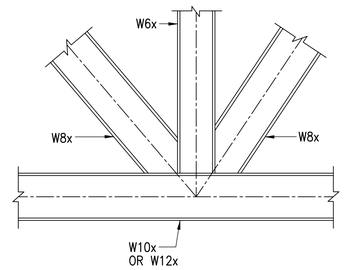

16 **DETAIL**
SC: 1" = 1'-0"

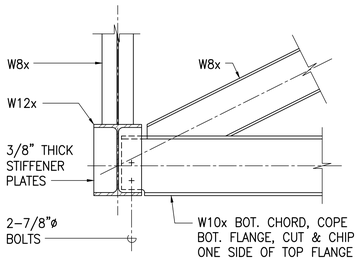

3
S71

17 **DETAIL**
SC: 1" = 1'-0"

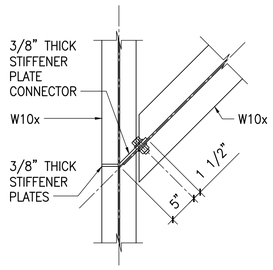

3
S72

18 **DETAIL**
SC: 1" = 1'-0"

REVISION	DATE	DESCRIPTION	MADE BY	APPROVED
3	5/21/2012	ADDENDUM 3.		

STUART K. OTAKE
LICENSED PROFESSIONAL ENGINEER
No. 5114-S
HAWAII, U.S.A.
EXPIRES 4/30/14

This work was prepared by me or under my supervision and construction of this project will be under my observation.

MITSUNAGA & ASSOCIATES, INC.

COUNTY OF HAWAI'I
DEPARTMENT OF PUBLIC WORKS, BUILDING DIVISION

NEW KA'Ū DISTRICT GYMNASIUM & SHELTER AT KA'U AND PAHALA ELEMENTARY SCHOOL CAMPUS
JOB NO. B-4108

PA'AU'AU AHUPUA'A, DISTRICT, HAWAI'I
ISLAND AND COUNTY OF HAWAII
96-2150 PIKAKE STREET, PAHALA, HAWAII 96777
TMK: (3) 9-6-05: 08 & 39

TYPICAL TRUSS CONNECTION DETAILS

REVIEWED:

DIVISION CHIEF
BUILDING DIVISION
DEPARTMENT OF PUBLIC WORKS

DATE
2012 APR-05

DESIGN BY:
DRAWN BY:
CHECKED BY:

SHEET NO.
S-8.3
130 OF 190 SHTS

NOTE:
ALL CONNECTIONS SHALL BE 3/16" FILLET WELDS, ALL AROUND TYP., U.N.O.

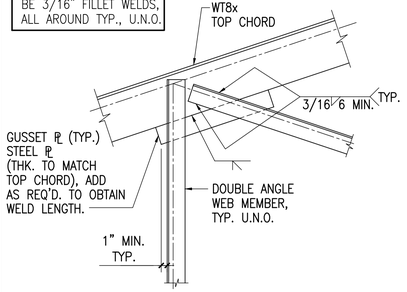

1 **DETAIL**
SC: 1" = 1'-0"

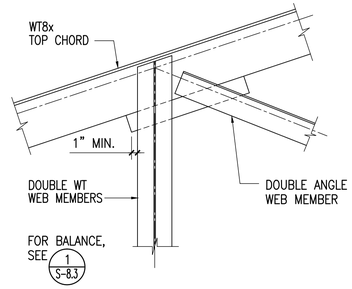

2 **DETAIL**
SC: 1" = 1'-0"

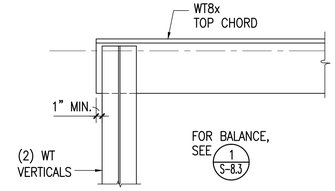

3 **DETAIL**
SC: 1" = 1'-0"

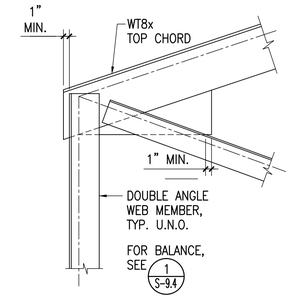

4 **DETAIL**
SC: 1" = 1'-0"

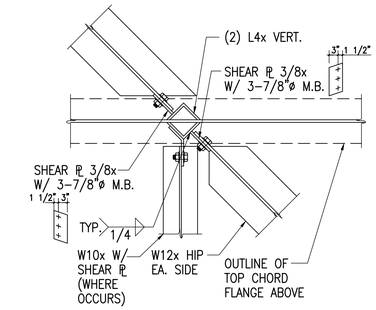

PLAN

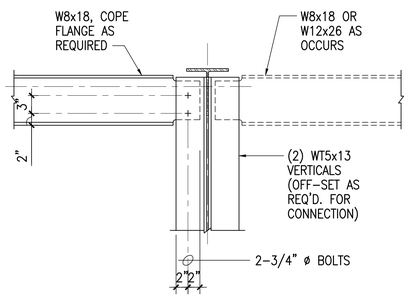

5 **DETAIL**
SC: 1" = 1'-0"

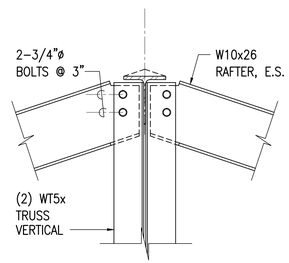

6 **DETAIL**
SC: 1" = 1'-0"

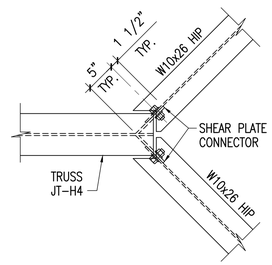

7 **DETAIL**
SC: 1" = 1'-0"

8 **DETAIL**
SC: 1" = 1'-0"

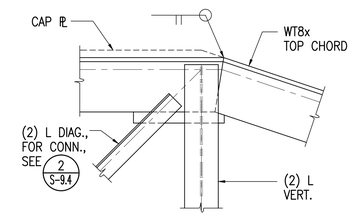

NOTE: HIPS NOT SHOWN.

ELEVATION

9 **DETAIL**
SC: 1" = 1'-0"

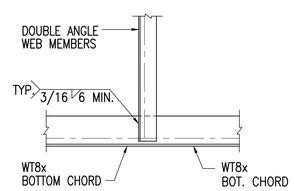

10 **DETAIL**
SC: 1" = 1'-0"

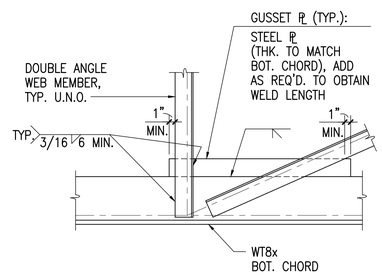

11 **DETAIL**
SC: 1" = 1'-0"

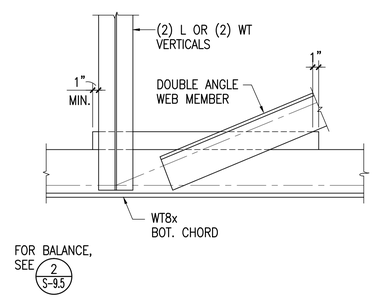

12 **DETAIL**
SC: 1" = 1'-0"

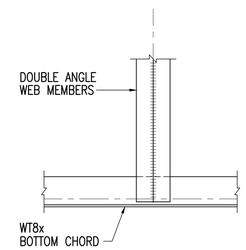

13 **DETAIL**
SC: 1" = 1'-0"

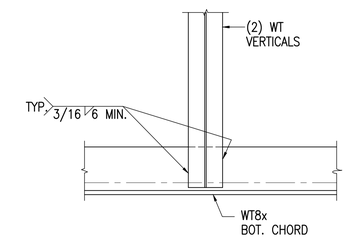

14 **DETAIL**
SC: 1" = 1'-0"

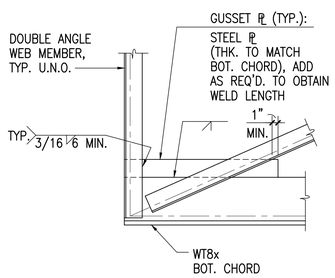

15 **DETAIL**
SC: 1" = 1'-0"

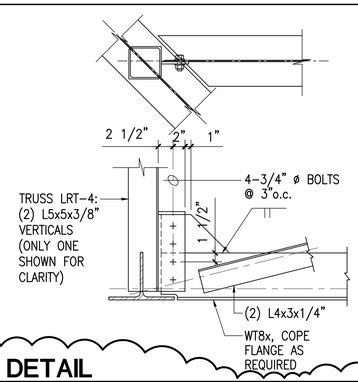

16 **DETAIL**
SC: 1" = 1'-0"

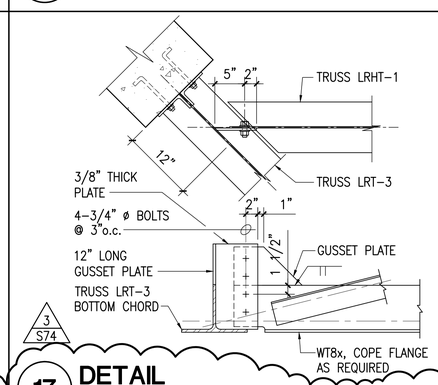

17 **DETAIL**
SC: 1" = 1'-0"

REVISION	DATE	DESCRIPTION	MADE BY	APPROVED
3	5/21/2012	ADDENDUM 3.		

STUART K. OTAKE
LICENSED PROFESSIONAL ENGINEER
No. 5114-S
HAWAII, U.S.A.
EXPIRES 4/30/14

This work was prepared by me or under my supervision and construction of this project will be under my observation.

MITSUNAGA & ASSOCIATES, INC.

COUNTY OF HAWAI'I
DEPARTMENT OF PUBLIC WORKS, BUILDING DIVISION

NEW KA'Ū DISTRICT GYMNASIUM & SHELTER AT KA'U AND PAHALA ELEMENTARY SCHOOL CAMPUS
JOB NO. B-4108

PA'AU'AU AHUPUA'A, DISTRICT, HAWAI'I
ISLAND AND COUNTY OF HAWAII
96-2150 PIKAKE STREET, PAHALA, HAWAII 96777
TMK: (3) 9-6-05: 08 & 39

TYPICAL TRUSS CONNECTION DETAILS

REVIEWED:

DIVISION CHIEF
BUILDING DIVISION
DEPARTMENT OF PUBLIC WORKS

DATE
2012 APR-05

DESIGN BY:
DRAWN BY:
CHECKED BY:
SHEET NO.
S-8.4
131 OF 190 SHTS

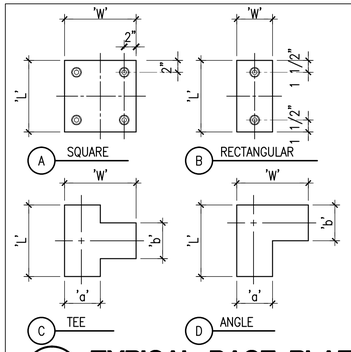

BASE PLATE SCHEDULE

MARK	SIZE 'W'	SIZE 'L'	SIZE 't'	SIZE 'a'	SIZE 'b'	ANCHOR BOLTS No.	ANCHOR BOLTS Dia.	ANCHOR BOLTS Embed.	TYPE	REMARKS
BP-1	4"	13"	3/4"	—	—	2	3/4"	12"	B	
BP-2	6"	13"	3/4"	—	—	2	7/8"	12"	B	

1 TYPICAL BASE PLATE SCHEDULE

N.T.S.

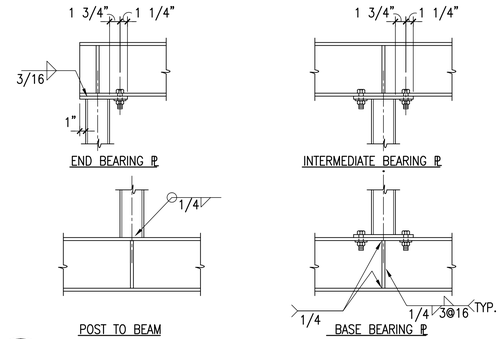

NOTES:

1. ALL TUBE AND PIPE BEARING PLATES SHALL BE 1/2" THICK UNLESS NOTED OTHERWISE ON PLAN OR SECTION.
2. ALL STIFFENERS SHALL BE 1/4" THICK, EACH SIDE, U.N.O.
3. FOR TUBE OR PIPE SIZES SEE PLAN.
4. W = BEAM FLANGE WIDTH MIN. (BEAM FLANGE WIDTH PLUS 1/2" AT END CONDITION).

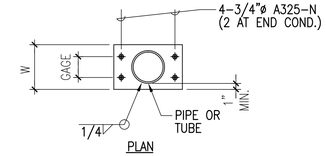

2 TYP. STEEL PIPE / TUBE COL. CONNECTION DETAILS

SC: 1" = 1'-0"

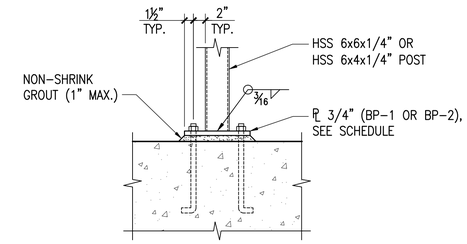

3 TYP. STEEL POST TO CONC. BEAM/WALL CONN.

SC: 1" = 1'-0"

BEAM SIZE (SEE PLAN)	BOLTS A325-N (SEE NOTES)	SHEAR PLATE 't'	WELD (E70XX)
W6x, C6x	2-3/4"ø	3/8	1/4
W8x, C8x	2-3/4"ø	3/8	1/4
W10x, C10x	2-7/8"ø	3/8	1/4
W12x, W14x	3-7/8"ø	3/8	1/4
W16x, W18x	4-7/8"ø	1/2	5/16
W21x	5-7/8"ø	1/2	5/16
W24x	6-7/8"ø	1/2	5/16

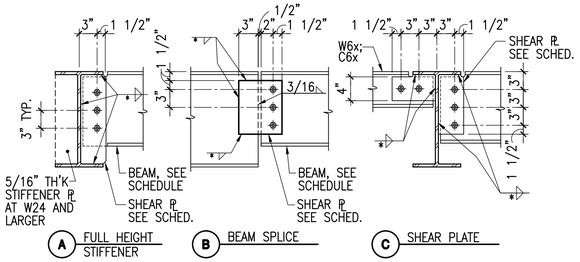

NOTES:

1. U.O.N. – ALL CONNECTIONS REQUIRE HIGH STRENGTH BOLTS CONFORMING TO ASTM A325.
2. CONNECTIONS ARE BEARING TYPE WITH THREADS INCLUDED IN THE SHEAR PLANE. HOLES ARE STANDARD ROUND (d + 1/16").

4 TYP. STEEL BEAM CONNECTION DETAILS AND SCHEDULE

SC: 1" = 1'-0"

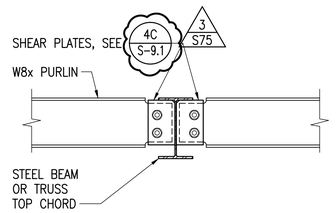

5 TYP. PURLIN-TO-BEAM CONN. DETAIL

SC: 1"=1'-0"

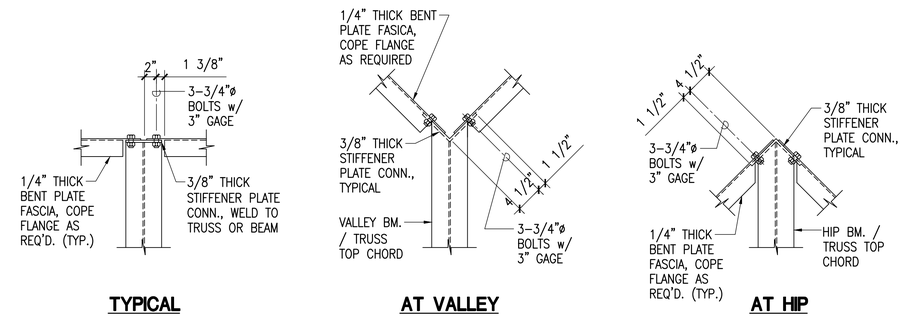

6 TYPICAL FASCIA CONNECTION DETAILS

SC: 1" = 1'-0"

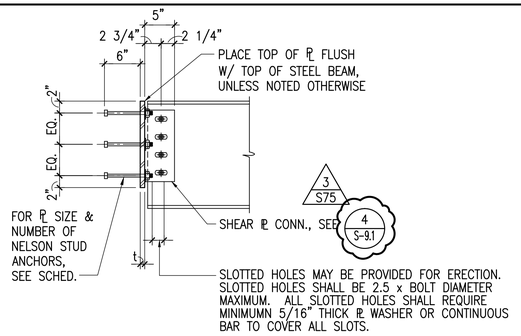

EMBEDDED PLATE SCHEDULE

MARK	EMBED PL SIZE W	EMBED PL SIZE H	EMBED PL SIZE t	ANCHOR BOLTS	REMARKS
EP-1	10"	12"	5/8"	4-3/4"ø	2 ROWS
EP-2	16"	12"	7/8"	6-3/4"ø	2 ROWS
EP-3	10"	20"	7/8"	6-3/4"ø	3 ROWS
EP-4	16"	20"	7/8"	9-3/4"ø	3 ROWS

NOTES:

1. SPECIAL INSPECTION IS REQUIRED FOR ALL ANCHOR INSTALLATIONS.

8 TYP. EMBEDDED PLATE DETAIL AND SCHEDULE

N.T.S.

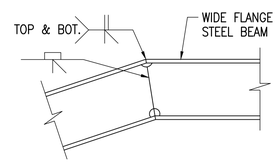

9 TYPICAL BENT BEAM DETAIL

SC: 1" = 1'-0"

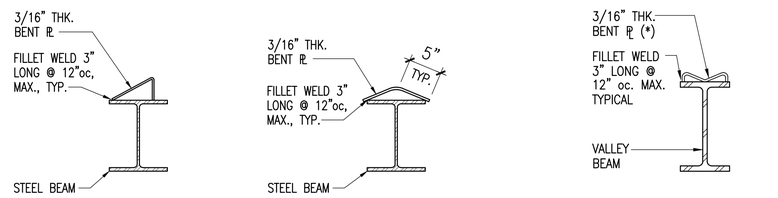

NOTE:

(*) – PROVIDE MINIMUM BEARING WIDTH REQ'D. TO SUPPORT METAL DECKING.

10 TYPICAL ROOF DECK SUPPORT DETAILS

N.T.S.

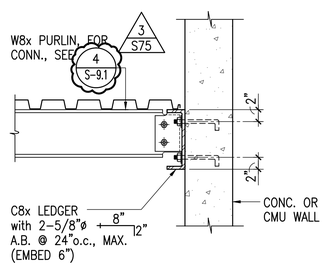

11 TYP. CHANNEL LEDGER DETAIL

SC: 1" = 1'-0"

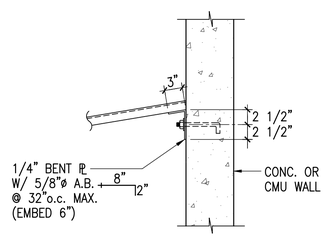

12 TYP. BENT PL LEDGER - ROOF DECK SUPPORT

SC: 1" = 1'-0"

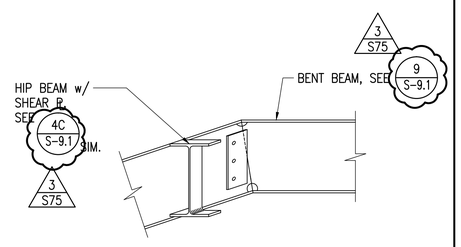

13 TYP. HIP-TO-BENT BEAM DETAIL

SC: 1" = 1'-0"

REVISION	DATE	DESCRIPTION	MADE BY	APPROVED
3	5/21/2012	ADDENDUM 3.		

STUART K. OTAKE
LICENSED PROFESSIONAL ENGINEER
No. 5114-S
HAWAII, U.S.A.
EXPIRES 4/30/14

This work was prepared by me or under my supervision and construction of this project will be under my observation.

MITSUNAGA & ASSOCIATES, INC.

COUNTY OF HAWAI'I
DEPARTMENT OF PUBLIC WORKS, BUILDING DIVISION

NEW KA'Ū DISTRICT GYMNASIUM & SHELTER AT KA'U AND PAHALA ELEMENTARY SCHOOL CAMPUS
JOB NO. B-4108
PA'AU'AU AHUPUA'A, DISTRICT, HAWAI'I
ISLAND AND COUNTY OF HAWAII
96-2150 PIKAKE STREET, PAHALA, HAWAII 96777
TMK: (3) 9-6-05: 08 & 39

TYPICAL STRUCTURAL STEEL SCHEDULES AND DETAILS

REVIEWED:

DIVISION CHIEF
BUILDING DIVISION
DEPARTMENT OF PUBLIC WORKS

DATE
2012 APR-05

DESIGN BY:
DRAWN BY:
CHECKED BY:
SHEET NO.
S-9.1
132 OF 190 SHTS

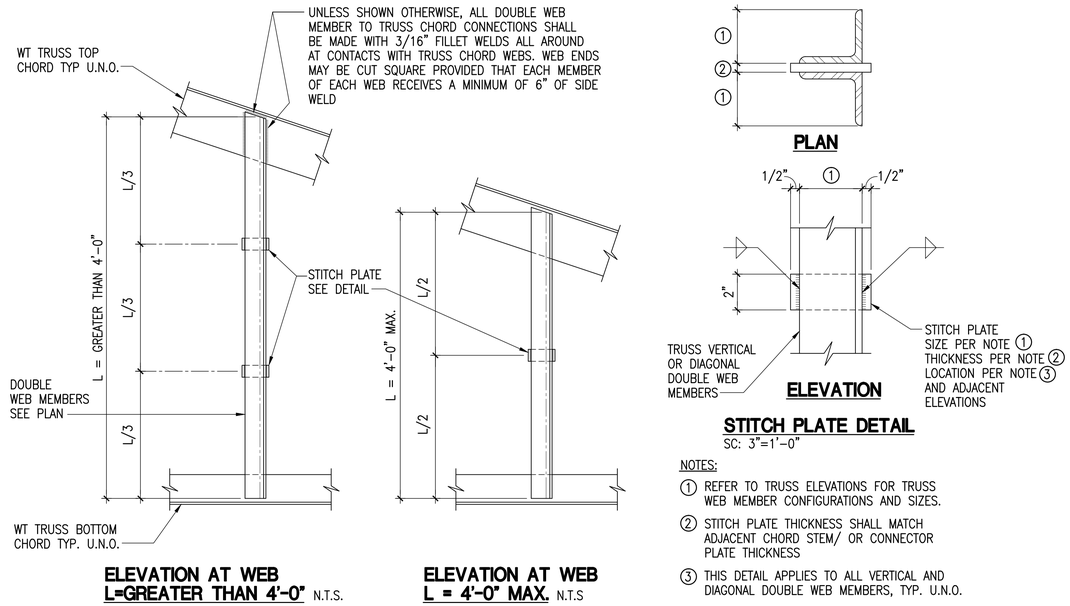

NOTES:

1. REFER TO TRUSS ELEVATIONS FOR TRUSS WEB MEMBER CONFIGURATIONS AND SIZES.
2. STITCH PLATE THICKNESS SHALL MATCH ADJACENT CHORD STEM/ OR CONNECTOR PLATE THICKNESS
3. THIS DETAIL APPLIES TO ALL VERTICAL AND DIAGONAL DOUBLE WEB MEMBERS, TYP. U.N.O.

1 TYP. STEEL ROOF TRUSS STITCH PLATE AND MINIMUM WELD DETAIL

SC: 1" = 1'-0"

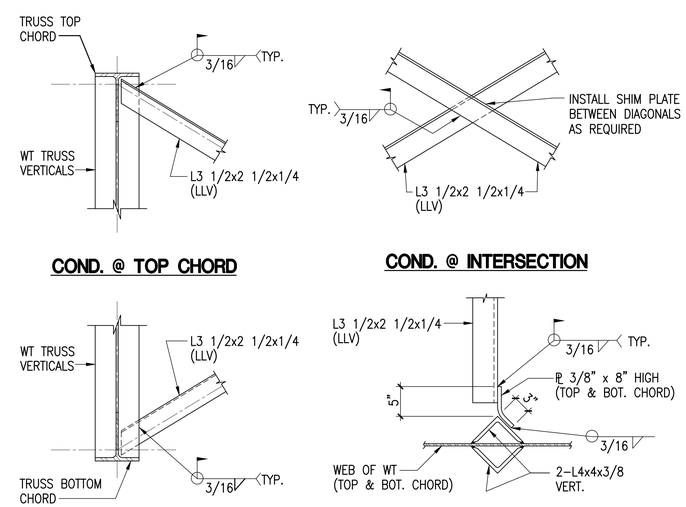

2 TYPICAL VERTICAL X-BRACING DETAILS

SC: 1" = 1'-0"

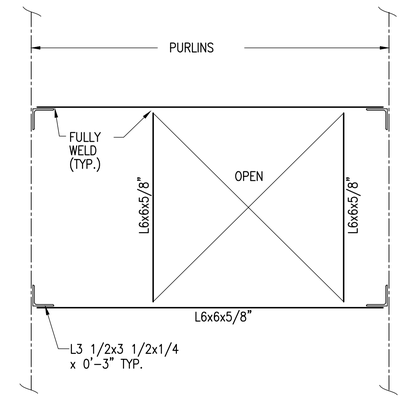

3 TYPICAL FRAMING AT ROOF OPENINGS < 5'-0"

SC: 1" = 1'-0"

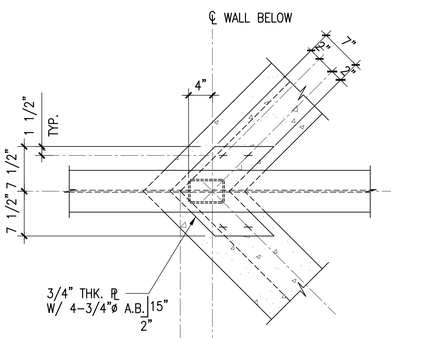

PLAN VIEW

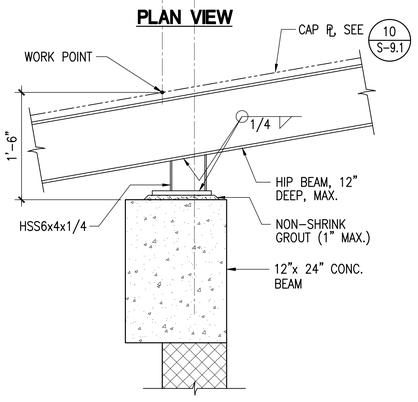

ELEVATION

7 TYP. HIP BEAM CONNECTION DETAIL

SC: 1" = 1'-0"

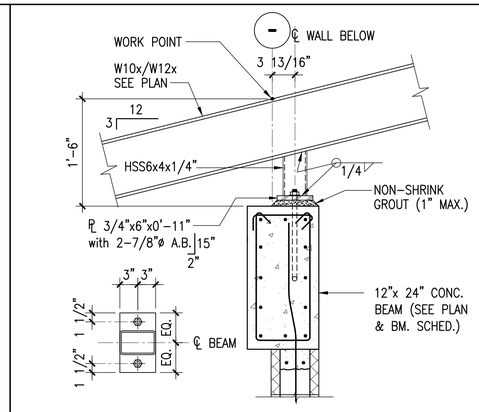

4 TYP. BEAM CONNECTION DETAIL

SC: 1" = 1'-0"

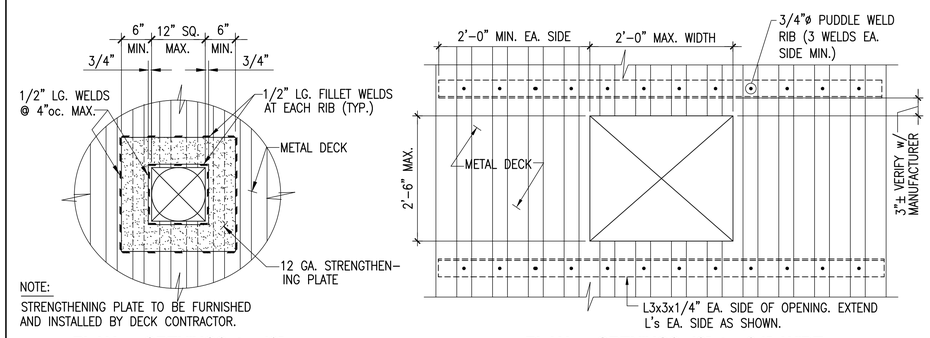

5 TYPICAL DETAILS at SMALL OPENINGS in ROOF DECK

N.T.S.

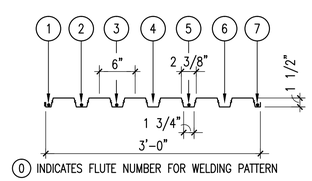

⓪ INDICATES FLUTE NUMBER FOR WELDING PATTERN

TYPE	GAGE	I (in^4)	+S (in^3)	-S (in^3)
B-36 (OR EQUAL)	20	.220	.235	.246

NOTES:

1. WELD FLUTES 1 THRU 5 AT SUPPORTS WITH EFFECTIVE MINIMUM 1/2" DIAMETER PUDDLE WELDS.

6 ROOF DECK SECTION PROPERTIES

N.T.S.

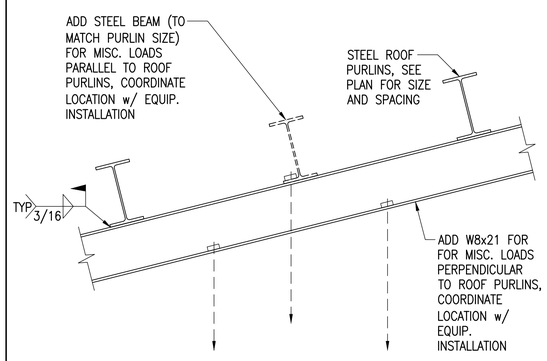

8 MISC. STEEL SUPPORT FRAMING

SC: 1" = 1'-0"

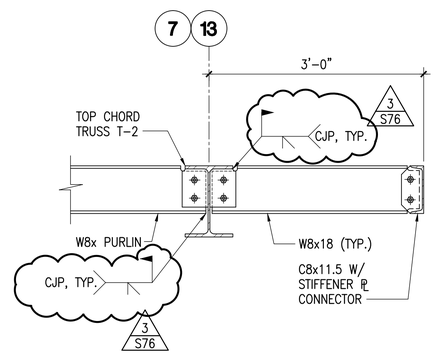

9 TYP. MOMENT CONNECTION AT OVERHANG

SC: 1" = 1'-0"

REVISION	DATE	DESCRIPTION	MADE BY	APPROVED
3	5/21/2012	ADDENDUM 3.		

STUART K. OTAKE
LICENSED PROFESSIONAL ENGINEER
No. 5114-S
HAWAII, U.S.A.
EXPIRES 4/30/14

This work was prepared by me or under my supervision and construction of this project will be under my observation.

MITSUNAGA & ASSOCIATES, INC.

COUNTY OF HAWAI'I
DEPARTMENT OF PUBLIC WORKS, BUILDING DIVISION

NEW KA'Ū DISTRICT GYMNASIUM & SHELTER AT KA'U AND PAHALA ELEMENTARY SCHOOL CAMPUS
JOB NO. B-4108

PA'AU'AU AHUPUA'A, DISTRICT, HAWAI'I
ISLAND AND COUNTY OF HAWAII
96-2150 PIKAKE STREET, PAHALA, HAWAII 96777
TMK: (3) 9-6-05: 08 & 39

DETAILS AND SECTIONS

REVIEWED:

DIVISION CHIEF
BUILDING DIVISION
DEPARTMENT OF PUBLIC WORKS

DATE
2012 APR-05

DESIGN BY:
DRAWN BY:
CHECKED BY:

SHEET NO.
S-9.2
133 OF 190 SHTS

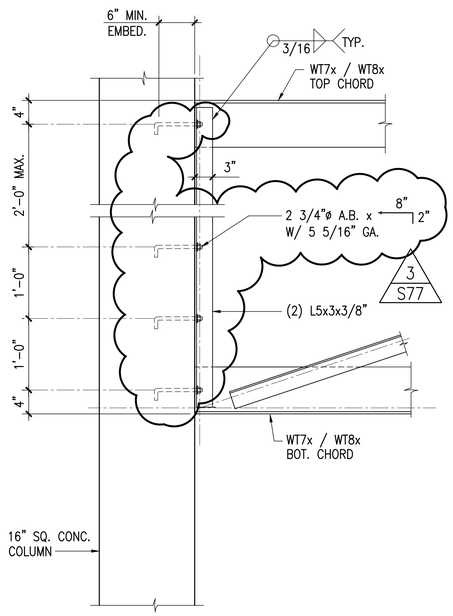

4 DETAIL
SC: 1" = 1'-0"

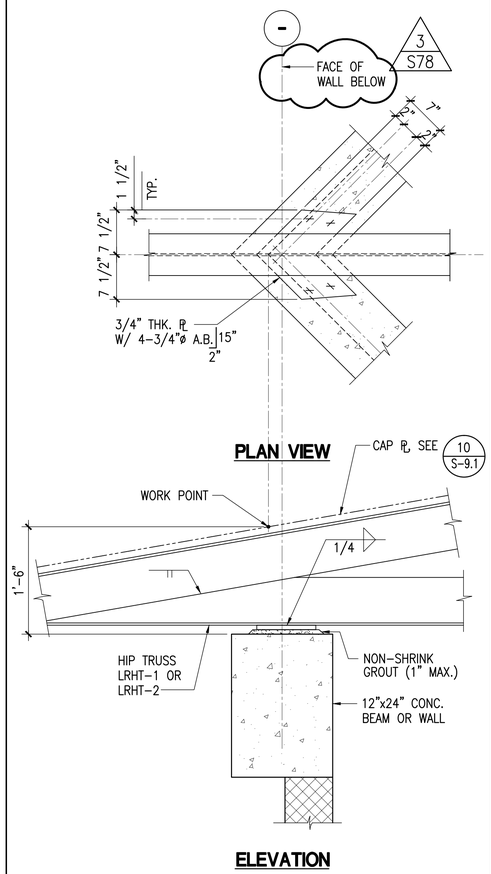

5 DETAIL
SC: 1" = 1'-0"

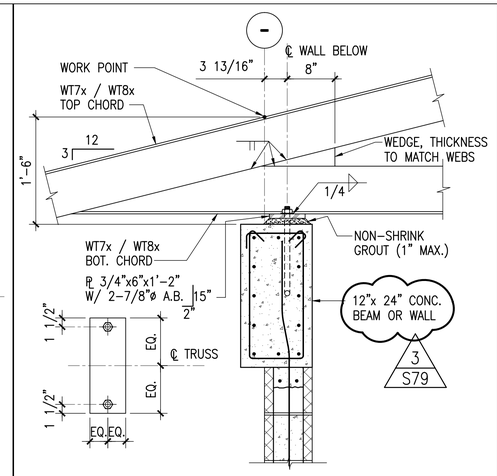

1 DETAIL
SC: 1" = 1'-0"

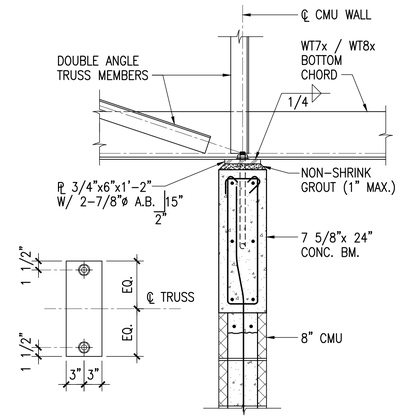

2 DETAIL
SC: 1" = 1'-0"

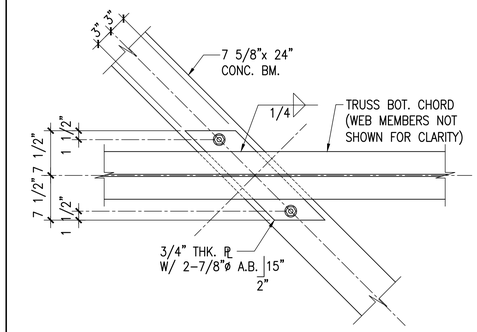

PLAN VIEW

3 DETAIL
SC: 1" = 1'-0"

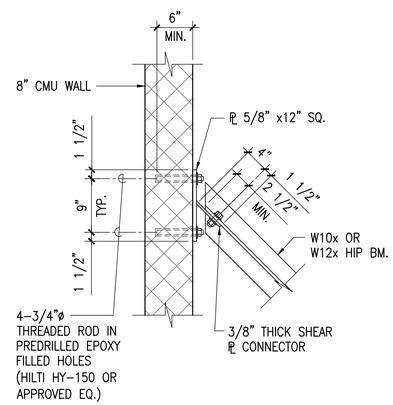

6 HIP BEAM / CMU WALL CONNECTION DETAIL
SC: 1" = 1'-0"

REVISION	DATE	DESCRIPTION	MADE BY	APPROVED
3	5/21/2012	ADDENDUM 3.		

STUART K. OTAKE
LICENSED PROFESSIONAL ENGINEER
No. 5114-S
HAWAII, U.S.A.

EXPIRES 4/30/14

This work was prepared by me or under my supervision and construction of this project will be under my observation.

MITSUNAGA & ASSOCIATES, INC.

COUNTY OF HAWAI'I
DEPARTMENT OF PUBLIC WORKS, BUILDING DIVISION

NEW KA'Ū DISTRICT GYMNASIUM & SHELTER AT KA'U AND PAHALA ELEMENTARY SCHOOL CAMPUS
JOB NO. B-4108

PA'AU'AU AHUPUA'A, DISTRICT, HAWAI'I
ISLAND AND COUNTY OF HAWAII
96-2150 PIKAKE STREET, PAHALA, HAWAII 96777
TMK: (3) 9-6-05: 08 & 39

DETAILS AND SECTIONS

REVIEWED:

DIVISION CHIEF
BUILDING DIVISION
DEPARTMENT OF PUBLIC WORKS

DATE
2012 APR-05

DESIGN BY:
DRAWN BY:
CHECKED BY:

SHEET NO.
S-9.4
135 OF 190 SHTS

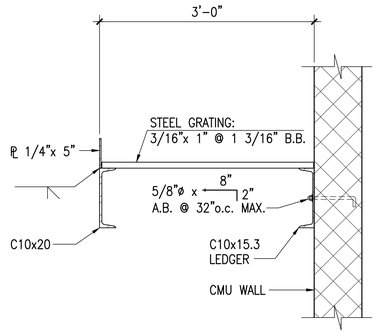

1 TYPICAL CATWALK SECTION
SC: 1" = 1'-0"

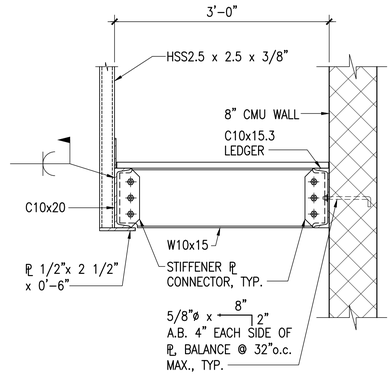

2 TYP. CATWALK HANGER DET.
SC: 1" = 1'-0"

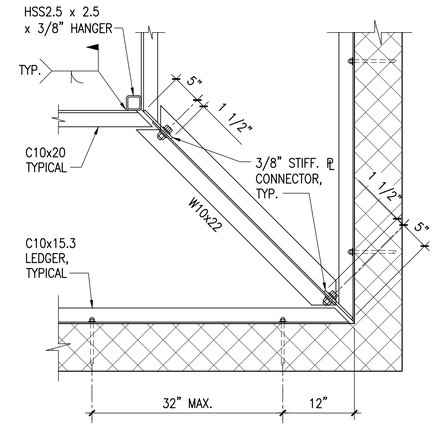

3 TYP. CATWALK HANGER PLAN AT CORNER
SC: 1" = 1'-0"

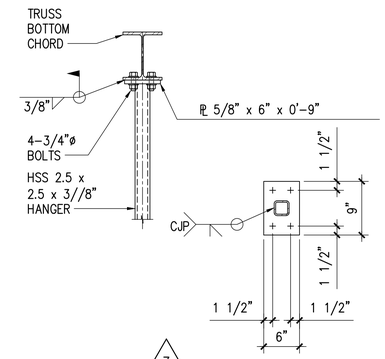

3
S80

4 TYP. CATWALK HANGER TOP CONNECTOR
SC: 1" = 1'-0"

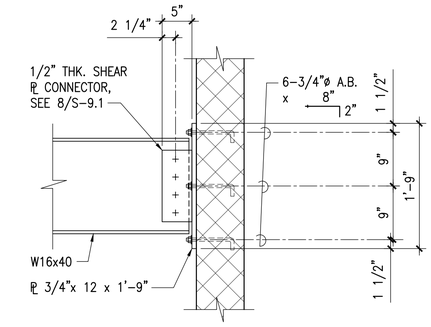

3
S81

5 TYP. OPERABLE DOOR CONNECTOR DETAIL
SC: 1" = 1'-0"

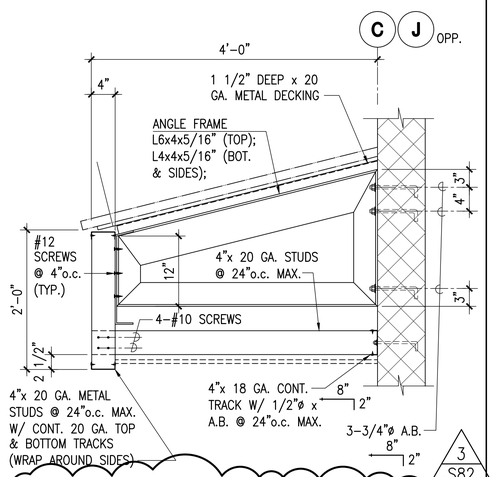

3
S82

6 TYP. AWNING SECTION AT VEST. #3 & #4
SC: 1" = 1'-0"

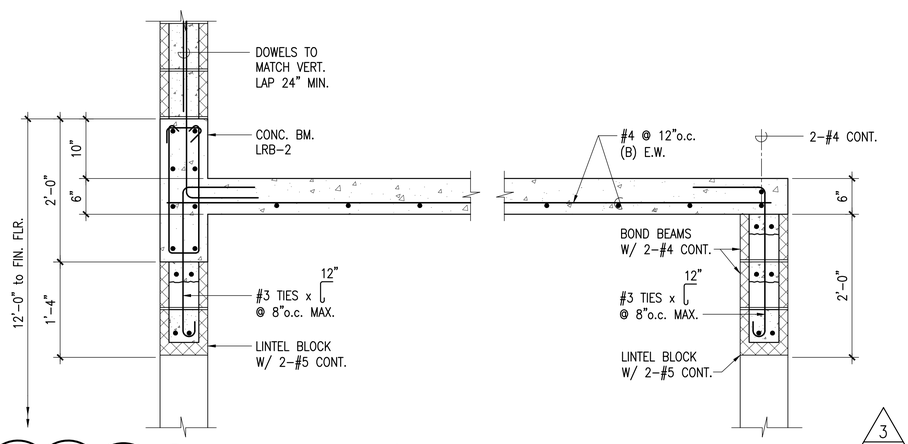

3
S83

7 TYPICAL SECTION THRU VESTIBULE
SC: 1" = 1'-0"

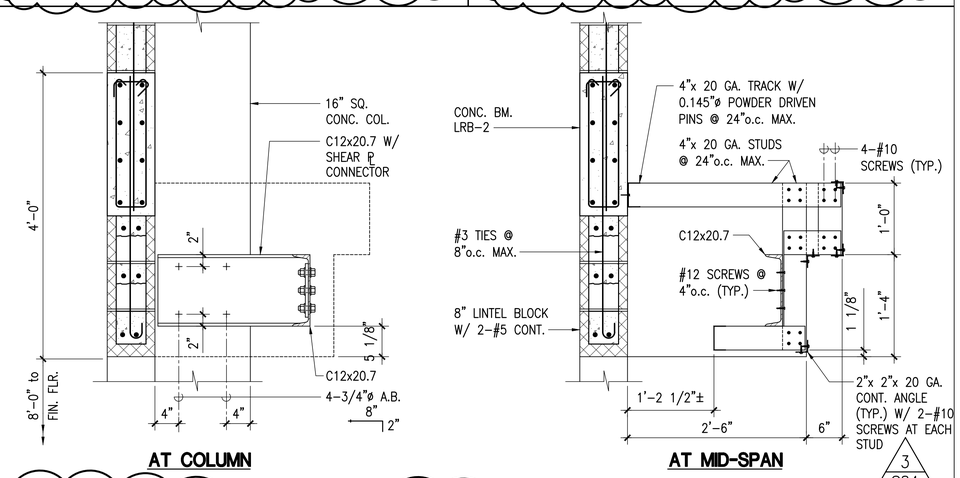

3
S84

8 TYPICAL SECTION AT ROLL-UP DOOR HEADER
SC: 1" = 1'-0"

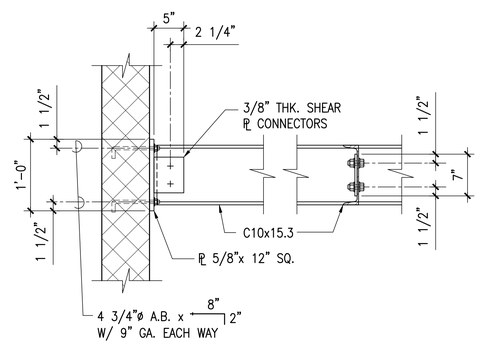

3
S85

9 TYP. KITCHEN HOOD SUPPORT FRAMING
SC: 1" = 1'-0"

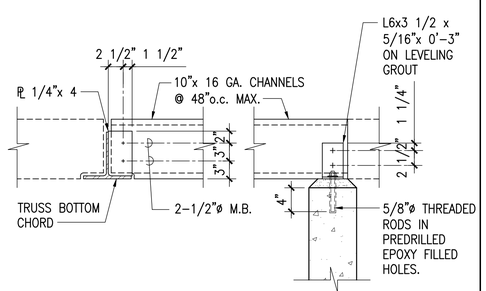

3
S86

10 TYP. CELING JOIST CONNECTION
SC: 1" = 1'-0"

REVISION	DATE	DESCRIPTION	MADE BY	APPROVED
3	5/21/2012	ADDENDUM 3.		

STUART K. OTAKE
LICENSED PROFESSIONAL ENGINEER
No. 5114-S
HAWAII, U.S.A.
EXPIRES 4/30/14

This work was prepared by me or under my supervision and construction of this project will be under my observation.

MITSUNAGA & ASSOCIATES, INC.

COUNTY OF HAWAI'I
DEPARTMENT OF PUBLIC WORKS, BUILDING DIVISION

NEW KA'Ū DISTRICT GYMNASIUM & SHELTER AT KA'U AND PAHALA ELEMENTARY SCHOOL CAMPUS
JOB NO. B-4108
PA'AU'AU AHUPUA'A, DISTRICT, HAWAI'I
ISLAND AND COUNTY OF HAWAII
96-2150 PIKAKE STREET, PAHALA, HAWAII 96777
TMK: (3) 9-6-05: 08 & 39

DETAILS AND SECTIONS

REVIEWED:

DIVISION CHIEF
BUILDING DIVISION
DEPARTMENT OF PUBLIC WORKS

DATE
2012 APR-05

DESIGN BY:
DRAWN BY:
CHECKED BY:

SHEET NO.
S-9.5
136 OF 190 SHTS

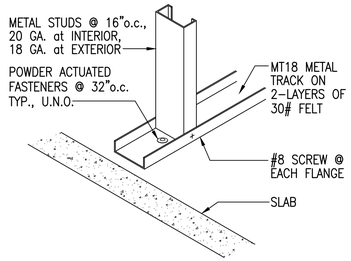

1 STUD WALL AT SLAB DETAIL
N.T.S.

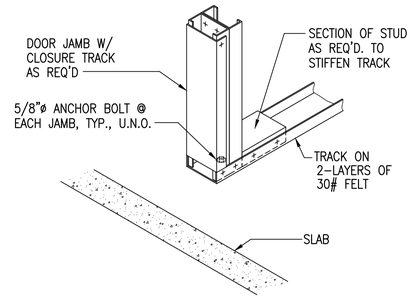

2 DOOR JAMB BASE AT SLAB DETAIL
N.T.S.

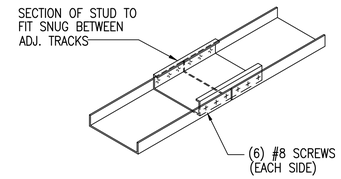

3 TOP & BOTTOM TRACK SPLICE DETAIL
N.T.S.

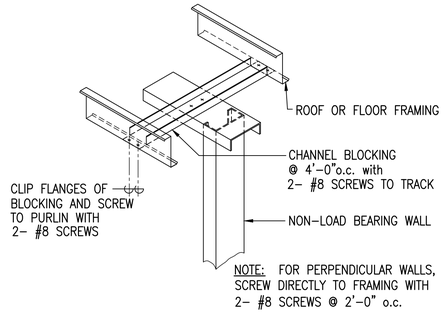

4 TOP OF NON-BEARING WALL PARALLEL TO FRAMING
N.T.S.

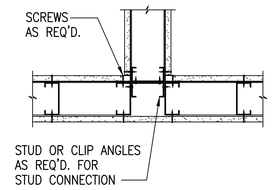

5 WALL INTERSECTION FRAMING DETAIL
N.T.S.

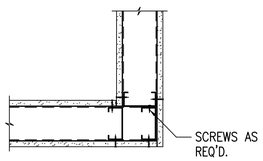

6 WALL CORNER FRAMING DETAIL
N.T.S.

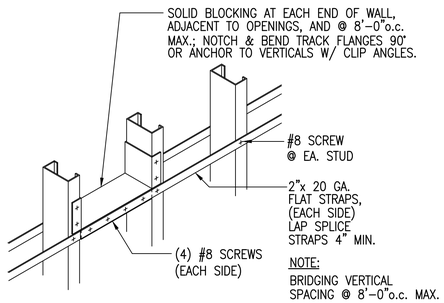

7 TYP. WALL BRIDGING DETAIL
N.T.S.

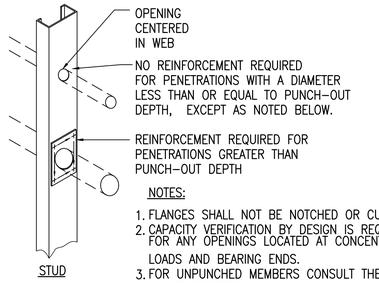

8 STUD WEB PENETRATIONS
N.T.S.

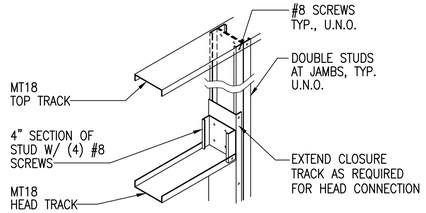

9 NON-BEARING JAMB & HEAD [<4'-0" OPENING WIDTH]
N.T.S.

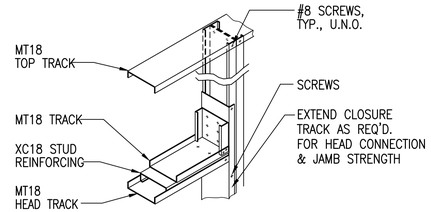

10 NON-BEARING JAMB & HEAD [>4'-0" OPENING WIDTH]
N.T.S.

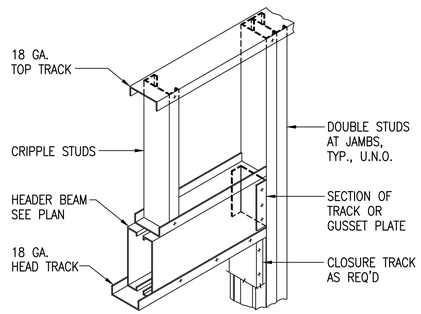

11 LOAD BEARING JAMB & HEAD
N.T.S.

HEADER SCHEDULE

MAXIMUM OPENING WIDTH	MINIMUM HEADER SIZE	REMARKS
	LIGHT GAGE STEEL	
4'-0"	2-800S162-54	
6'-0"	2-1000S162-54	
8'-0"	2-1200S200-54	

12 BOX STUD HEADER SCHEDULE
N.T.S.

3/S87

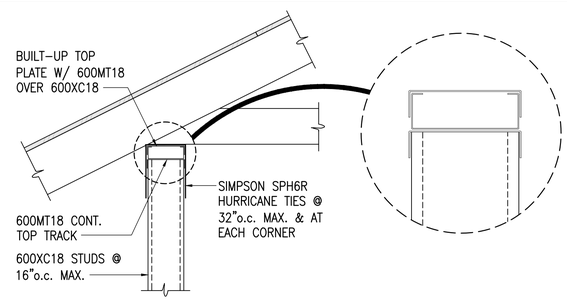

a STUD TO TOP PLATE

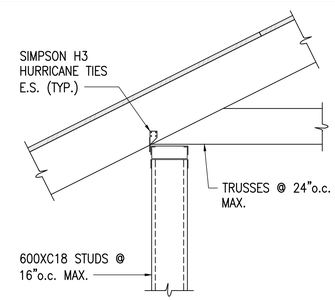

b TOP PLATE TO TRUSS

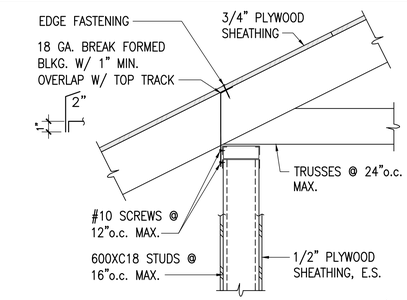

c BLOCKING

3/S88

13 TYPICAL EAVE DETAIL
SCALE: 1" = 1'-0"

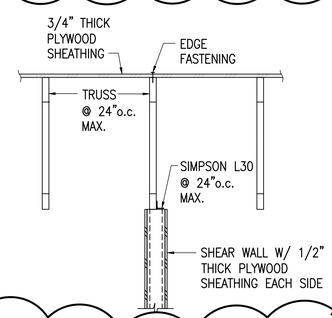

3/S89

16 TYPICAL TRUSS TO SHEARWALL CONNECTION DETAIL
N.T.S.

REVISION	DATE	DESCRIPTION	MADE BY	APPROVED
3	6/21/2012	ADDENDUM 3.		

STUART K. OTAKE
LICENSED PROFESSIONAL ENGINEER
No. 5114-S
HAWAII, U.S.A.
EXPIRES 4/30/14

This work was prepared by me or under my supervision and construction of this project will be under my observation.

MITSUNAGA & ASSOCIATES, INC.

COUNTY OF HAWAI'I
DEPARTMENT OF PUBLIC WORKS, BUILDING DIVISION

NEW KA'Ū DISTRICT GYMNASIUM & SHELTER AT KA'U AND PAHALA ELEMENTARY SCHOOL CAMPUS
JOB NO. B-4108
PA'AU'AU AHUPUA'A, DISTRICT, HAWAI'I
ISLAND AND COUNTY OF HAWAII
96-2150 PIKAKE STREET, PAHALA, HAWAII 96777
TMK: (3) 9-6-05: 08 & 39

TYPICAL LIGHT GAUGE STEEL DETAILS AND SECTIONS

REVIEWED:

DIVISION CHIEF
BUILDING DIVISION
DEPARTMENT OF PUBLIC WORKS

DATE
2012 APR-05

DESIGN BY:
DRAWN BY:
CHECKED BY:
SHEET NO.
S-10.1
OF 190 SHTS